Round Body Design
Pneumatic Cylinders

SR Series

STAINLESS STEEL PISTON RODS
Corrosion resistant stainless steel is now the standard piston rod material for all bore sizes up to and including 1.50 inch bore at no additional cost. The only exception to the stainless steel standard is when a hollow rod or non-rotating hexagonal rod option is specified. Stainless steel is also the standard material on block, trunnion and KDX mounts.

PRE-LUBRICATION
All SR Series cylinders are factory prelubricated for use with or without added lubrication.

ROD BUSHINGS
Oil impregnated bronze, reamed to a close tolerance provides for smooth operation and long life.

SEALS
All piston and rod seals are of a lipseal construction. Buna-N is standard on all models. Fluorocarbon seals are available as an option.

PISTON BODY
Pistons are precision machined aluminum construction. Piston rod connections are threaded and loctited to provide for leakproof and durable service.

UNITIZED CONSTRUCTION
Precision double-rolled unitized construction provides durable, leak-proof service and long life.

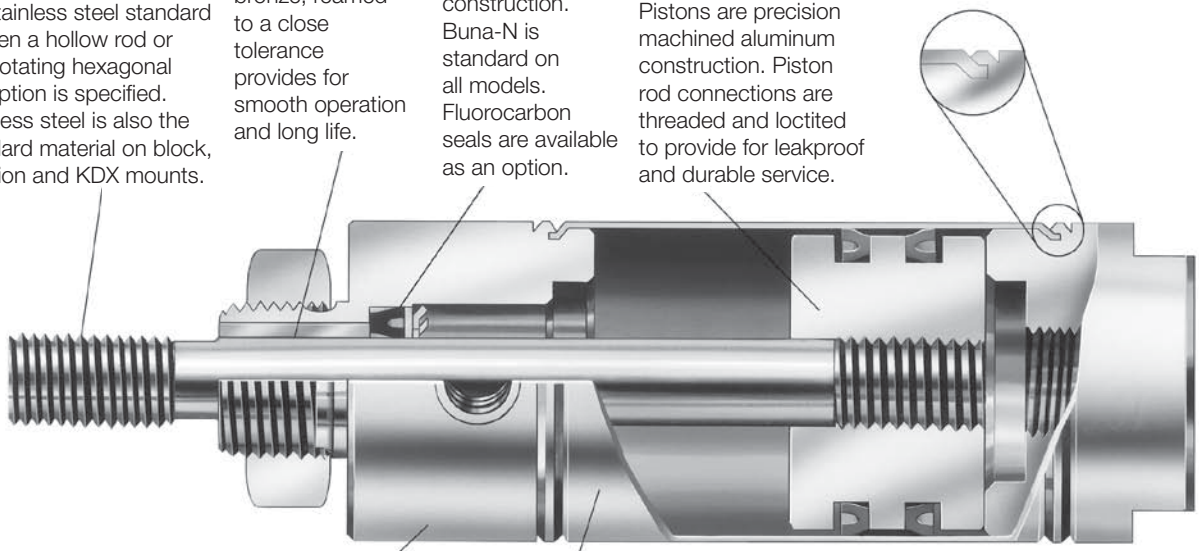

HEADS AND CAPS
Aluminum construction with precision machining provides a smooth break away. The tube-to-head connection is a strong double rolled construction.

CYLINDER TUBE
Type 304 stainless steel, polished to a micro-inch finish on the I.D. provides low friction and long life. A matte finish on the O.D. provides smudge resistance.

TWELVE BORE SIZES – 5/16" thru 3". SR Series cylinders are designed to be dimensionally interchangeable with other major stainless steel cylinders.

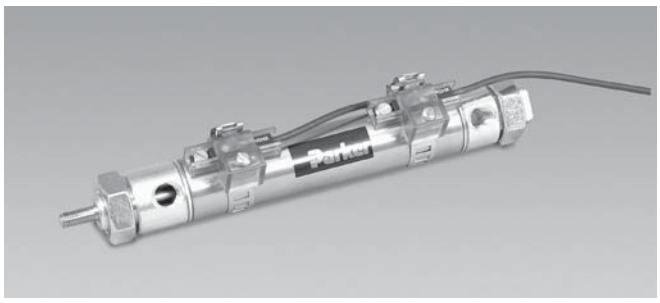

SRM Series

The SRM Series air cylinder can be ordered with reed or solid state sensors that are easily adjustable anywhere on the cylinder body, with no special mounting rail required. NItrile-barium particle composite surrounds the entire piston diameter for non-contact sensing.

Sensors are compatible with Programmable Controllers; an LED indicator is also standard. A shielded cable is standard, and can be extended to 32 feet maximum by the user.

SRD/SRDM Series

SRD/SRDM Series cylinders are designed to withstand a wide range of operating environments to tolerate moisture and many types of lubricants and solvents. The cylinders have a acetal resin head and cap, an anodized aluminum piston, stainless steel cylinder tube and stainless steel piston rod. Stainless steel accessories are available.

Features

- 304 stainless steel cylinder body, non repairable construction
- Aluminum heads and caps, acetal resin heads and caps are optional
- 12 bore sizes — 5/16" through 3" (see dimensional tables for SRM and SRD/SRDM exclusions).
- Stainless steel piston rods are standard up to 1.50" bore
- 28 standard mounting styles (not all available on SRM and SRD/SRDM – see table on following page)
- Single and double acting
- Adjustable cushions optional on both ends

Operating information

Operating pressure:	250 PSIG (17 bar) for SR and SRM 100 PSIG (7 bar) for SRD/SRDM
Temperature range:	-10°F to 165°F (-23°C to 74°C) for SR 14°F to 140°F (-10°C to 60°C) for SRM 32°F to 160°F (0°C to 71°C) for SRD/SRDM
Filtration requirements:	40 micron, dry filtered air

Ordering information

1.06 | C | [ ] | D | SR | B | V | [ ] | [ ] | [ ] | C | 2.00

Bore Size [1,6]	
.31	5/16"
.44	7/16"
.56	9/16"
.75	3/4"
.88	7/8"
1.06	1-1/16"
1.25	1-1/4"
1.50	1-1/2"
1.75	1-3/4"
2.00	2"
2.50	2-1/2"
3.00	3"

Series	
SR	Standard cylinder
SRM	With magnetic piston
SRD	With acetal resin caps
SRDM	With acetal resin caps and magnetic piston

Piston	
Blank	No bumpers
B	With bumpers [3]

Seals	
Blank	Standard seals
V	Fluorocarbon seals [4]
W	Rod wiper

Stroke
Specify in inches.

Cushion Cap [2]
Use "C" only when cushion cap is required.

Cushion Head [2]
Use "C" only when cushion head is required.

Non-Standard Piston Rod
Use "3" only when special piston rod end is required.
Specify CC, LE and A Dimensions (See page C7.)

Non-Standard Rod
Specify Y for stainless steel piston rod.
Stainless steel is standard on all bore sizes up to and including 1.50" Bore and all SRD/ SRDM versions.

Special
Use "S" only if special modifications are required, except piston rod end. (See page C7.)

Double Rod
Use "K" only when double rod is required.
Available on DX and DXH mounting only.

Mounting [1,5]
N, NR, NRP, P, R, RP, D, DP, DXP, DX, DXH, A, RA, AP, AR, BRN, BRR, BFD, BRD, BFN, BFR, TRN, TRR, TFD, TRD, TFN or TFR.

[1] Bore sizes and mounting styles are limited by series. See table on next page for availability.
[2] Cushions not available on SRD/SRDM series, only available on D, DP, DXP mounts, reference page C31.
[3] Bumpers may increase cylinder length. Please reference page C30 for adders.
[4] Fluorocarbon seals not available on SRM or SRDM series.
[5] TRD mount not available with cushions.
[6] Magnet not available on bore sizes .31, .44, .88 and 3.00.

Sensors
See section L for sensors.

For ordering purposes, when special options or common modifications are requested, the factory will assign a sequential part number in place of the model number.

Parker Hannifin Corporation
Pneumatic Division
Richland, Michigan
www.parker.com/pneumatics

Available Mounting Styles

Mount Style	Description	Bore Size (Reference Notes 1 & 2 for availability) 5/16" (1,2)	7/16" (1,2)	9/16"	3/4"	7/8" (1,2)	1-1/16"	1-1/4" (2)	1-1/2"	1-3/4" (2)	2"	2-1/2" (2)	3" (1,2)	Max. Stroke (in.)
N (2)	Nose mount, spring return	●	●	●	●	●	●	●	●	●	▲	–	–	6" (3)
NR (2)	Nose mount, spring return, hex rod (non-rotating)	–	●	●	●	●	●	●	●	●	–	–	–	6"
NRP (2)	Pivot and nose mount, spring return, hex rod (non-rotating)	–	●	●	●	●	●	●	●	●	–	–	–	6"
P (2)	Pivot mount, spring return	●	●	●	●	●	●	●	●	●	▲	–	–	6"
R (2)	Nose mount, spring extended	●	●	●	●	●	●	●	●	●	▲	–	–	6"
RP (2)	Pivot and nose mount, spring extend	●	●	●	●	●	●	●	●	–	▲	–	–	6"
D	Nose mount, double acting	●	●	●	●	●	●	●	●	●	●	●	●	12"
DP (2)	Pivot and nose mount, double acting, pivot pin	–	●	–	●	–	●	–	●	–	–	–	–	12"
DXP	Pivot and nose mount, double acting, no pivot pin	●	●	●	●	●	●	●	●	●	●	●	●	See Note 4
DX	Threaded both ends, double acting	–	See DXP	See DXP	See DXP	See DXP	See DXP	See DXP	●	–	See DXP	–	–	32"
KDX	Threaded both ends, double acting, double rod	–	●	●	●	●	●	●	●	●	●	●	●	See Note 5
KDXH (2)	Threaded both ends, double rod, hollow rod	–	–	–	–	–	●	●	●	●	●	–	–	12"
A (1,2)	Nose mount, spring return, head adjustable stroke	–	–	–	●	–	●	–	●	–	–	–	–	6"
RA (1,2)	Nose mount, spring extend, cap adjustable stroke	–	–	–	●	–	●	–	●	–	–	–	–	6"
AP (1,2)	Pivot mount, spring return, head adjustable stroke	–	–	–	●	–	●	–	●	–	–	–	–	6"
AR (1,2)	Air reservoirs	–	–	–	●	–	●	–	●	–	●	–	–	12"
BRN (2)	Rear block mount, single acting,	–	●	–	●	–	●	–	●	–	–	–	–	6"
BRR (2)	Rear block mount, single acting, spring return	–	–	–	●	–	●	–	●	–	–	–	–	6"
BFD (2)	Front block mount, double acting	●	●	–	●	–	●	–	●	–	–	–	–	12"
BRD (2)	Rear block mount, double acting	–	●	–	●	–	●	–	●	–	–	–	–	12"
BFN (2)	Front block mount, single acting spring return	–	●	–	●	–	●	–	●	–	–	–	–	6"
BFR (2)	Front block mount, single acting spring extend	–	–	–	●	–	●	–	●	–	–	–	–	6"
TRN (2)	Rear trunnion mount, single acting, spring return	–	●	–	●	–	●	–	●	–	–	–	–	6"
TRR (2)	Rear trunnion mount, single acting spring extend	–	–	–	●	–	●	–	●	–	–	–	–	6"
TFD (2)	Front trunnion mount, double acting	–	●	–	●	–	●	–	●	–	–	–	–	12"
TRD (2)	Rear trunnion mount, double acting	–	●	–	●	–	●	–	●	–	–	–	–	12"
TFN (2)	Front trunnion mount, single acting spring return	–	●	–	●	–	●	–	●	–	–	–	–	6"
TFR (2)	Front trunnion mount, single acting spring extend	–	–	–	●	–	●	–	●	–	–	–	–	6"

▲ Recommended maximum stroke is 4" in models N, P, R & RP.
1 Not available on SRM (magnetic piston) cylinders.
2 Not available on SRD/DM (acetal resin caps) cylinders.
3 Recommended maximum stroke is 4" for 5/16" bore models.
4 Max stroke 12" for bore sizes under 3/4"; 32" for bore sizes 3/4" and up.
5 Max stroke 6" for bore sizes under 3/4"; 12" for bore sizes 3/4" and up.

Specifications

- 304 stainless steel cylinder body.
- Aluminum heads and caps.
- Stainless steel piston rods are standard up to 1.50" bore.
- Nominal pressure rating: 250 psi for SR and SRM
  100 psi for SRD/SRDM
- Standard temperature: -10°F to 165°F (SR)
  14°F to 140°F (SRM)
  32°F to 160°F (SRD/SRDM)
  -10°F to 1250°F (Fluorocarbon seals)

In line with our policy of continuing product improvement, the specifications in this catalog are subject to change without notice.

- Twelve bore sizes — 5/16" through 3" (see table for SRM and SRD/DM exclusions).
- 28 standard mounting styles (not all available on SRM and SRD/SRDM – see table on previous page).
- Single and double acting
- Bumpers
- Adjustable cushions
- Rod wipers

For additional mounting styles please consult factory.

Port Locations

Mounting Style	Standard Head Port Location	Standard Cap Port Location	Standard Vent Location
AR	Face	Face	None
BFR	2	None	2
BFN	None	Face	2
BRD	2	2	None
BFD	2	Face	None
BRR	2	None	2
BRN	None	2	2
TFR	1	None	1
TFN	None	Face	1
TRD	1	1	None
TFD	1	Face	None
TRR	1	None	1
TRN	None	1	1
AP	None	2	2
RA	2	None	2
A	None	Face	2
KDXH	2	2	None
KDX	2	2	None
DX	2	2	None
DXP	2	2	None
DP	2	2	None
D	2	Face	None
RP	2	None	2
R	2	None	2
P	None	2	2
NRP	None	2	2
NR	None	Face	2
N	None	Face	2

End View of Mountings for Port Location

Mounting Styles N, NR, D, R, AR

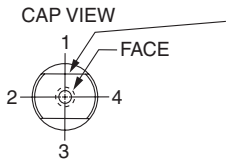

Standard location for cushion adjustment needle when cushions are specified on D mounts.

Mounting Styles P, RP, DXP, NRP, DP, AP

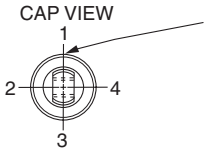

Standard location for cushion adjustment needle when cushions are specified on DXP mounts.

Mounting Style A

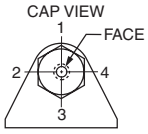

Mounting Style RA

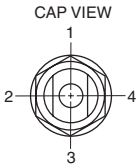

Mounting Styles BFD, BFN, BFR

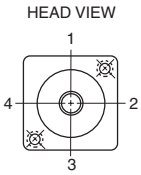

Mounting Styles BRN, BRR, BRD

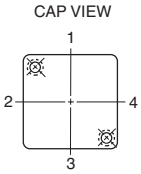

Mounting Styles KDXH, KDX

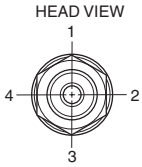

Mounting Style DX

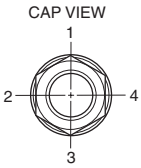

Mounting Styles TFD, TFN, TFR

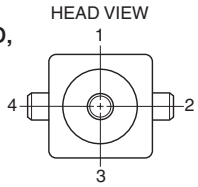

Mounting Styles TRN, TRR, TRD

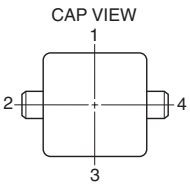

Cylinders will have ports at these locations unless otherwise specified.

Port Size — Rod Diameter, Spring Force Data

Bore size	Port size	Rod diameter (or Hex)	Force factor		Spring return (lbs)		Spring extend (lbs)	
			Push	Pull	Normal	Extended	Normal	Retracted
.31 (5/16")	#10-32	1/8"	0.08	0.06	0.5	1	0.5	1
.44 (7/16")	#10-32	3/16"	0.15	0.12	1	2	1	2
.56 (9/16")	#10-32	3/16"	0.25	0.22	2	4	2	4
.75 (3/4")	1/8 NPTF	1/4"	0.44	0.39	3	6	3	6
.88 (7/8")	1/8 NPTF	1/4"	0.60	0.55	3	6	3	6
1.06 (1-1/16")	1/8 NPTF	5/16"*	0.89	0.81	3†	6†	7.5	15
1.25 (1-1/4")	1/8 NPTF	7/16"	1.23	1.08	7.5	15	7.5	15
1.50 (1-1/2")	1/8 NPTF	7/16"	1.77	1.62	6†	12†	9	18
1.75 (1-3/4")	1/4 NPTF	1/2"	2.40	2.21	11	24	11	24
2.00 (2")	1/4 NPTF	5/8"	3.14	2.84	15	30	15	30
2.50 (2-1/2")	1/4 NPTF	5/8"	4.91	4.60	N/A	N/A	N/A	N/A
3.00 (3")	3/8 NPTF	3/4"	7.07	6.63	N/A	N/A	N/A	N/A

* Non-rotating version uses 3/8" hex.
† Block mount and trunnion mount spring return lbs. equals spring extend lbs.

Springs — shot peened music wire for high cycle life. Spring spacers are provided for every one inch of stroke (1/2" for 5/16" and 7/16" bores) to insure uniform spring rate and prevent spring failure.

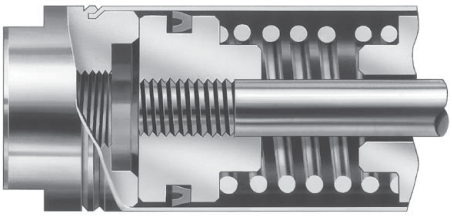

Option Availability

Option	Bumpers	Fluorocarbon seals	Rod wipers	Cushions	Acetal resin end caps
Bumpers	—	◆	◆	X	◆
Fluorocarbon seals	—	—	X	S	◆
Rod wiper	—	—	—	◆	◆
Cushions	—	—	—	—	X

◆ = Available Options
S = Available as Special
X = Not Available

Non-Standard Rods

For non-standard rod dimensions, or undersized rod end threads, put a "3" in model number and describe the rod using the letters shown in the drawing. Specify CC, LE and A dimensions. LE is measured in retracted position.

Full diameter rod end threads

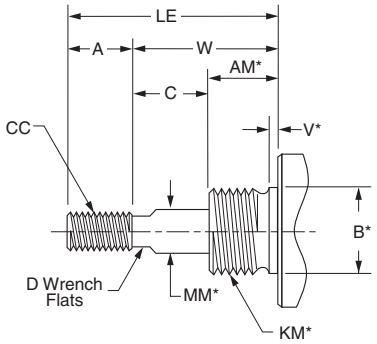

Undersized rod end threads

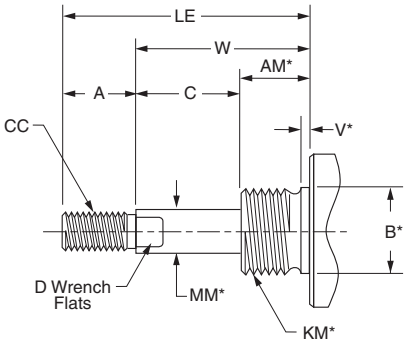

* Requires an S designation in model number.

Style N

Nose mount, spring return

Bore size	SR	SRM	Std. strokes (in)	Max.. stroke (in)	SS rod std
5/16"	•		1/2, 1, 1-1/2, 2, 2-1/2, 3, 4	4	✔
7/16"	•		1/2, 1, 1-1/2, 2, 2-1/2, 3, 4	6	✔
9/16"	•	•	1/2, 1, 1-1/2, 2, 3, 4	6	✔
3/4"	•	•	1/2, 1, 1-1/2, 2, 3, 4	6	✔
7/8"	•		1/2, 1, 1-1/2, 2, 3, 4	6	✔
1-1/16"	•	•	1/2, 1, 1-1/2, 2, 3, 4	6	✔
1-1/4"	•	•	1/2, 1, 2, 3, 4	6	✔
1-1/2"	•	•	1/2, 1, 2, 3, 4	6	✔
1-3/4"	•	•	1/2, 1, 1-1/2, 2, 2-1/2, 3, 4	6	
2"	•	•	–	4	

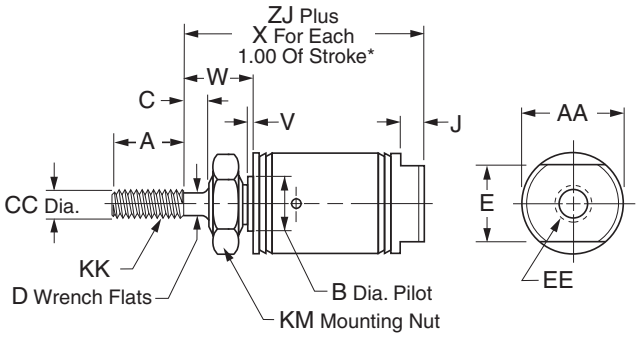

Bore size	A	AA	B	C	CC	D	E	EE	J	KK	KM	V	W	X	SR ZJ	SRM ZJ
5/16"	0.38	0.36	–	–	0.125	–	0.36	#10-32	–	#5-40 UNC	1/4-28	0	0.25	0.75**	1.12	–
7/16"	0.50	0.50	0.374	–	0.188	–	0.38	#10-32	0.19	#10-32 UNF	3/8-24	0.05	0.31	0.94**	1.31	–
9/16"	0.50	0.62	0.437	–	0.188	–	0.50	#10-32	0.19	#10-32 UNF	7/16-20	0.06	0.38	1.62	1.53	1.76
3/4"	0.50	0.81	0.499	–	0.250	–	0.62	1/8 NPTF	0.19	1/4-28 UNF	1/2-20	0.09	0.44	1.69	1.50	1.75
7/8"	0.50	0.93	0.624	–	0.250	–	0.62	1/8 NPTF	0.19	1/4-28 UNF	5/8-18	0.09	0.50	1.56	1.84	–
1-1/16"	0.50	1.12	0.624	0.12	0.312	0.25	0.88	1/8 NPTF	0.19	5/16-24 UNF	5/8-18	0.09	0.69	1.56	2.06	2.31
1-1/4"	0.75	1.34	0.749	0.25	0.437	0.38	0.88	1/8 NPTF	0.25	7/16-20 UNF	3/4-16	0.09	0.88	1.81	2.66	2.78
1-1/2"	0.75	1.56	0.749	0.25	0.437	0.38	0.88	1/8 NPTF	0.25	7/16-20 UNF	3/4-16	0.09	0.88	1.69	2.44	2.69
1-3/4"	0.88	1.84	1.031	0.31	0.500	7/16	1.25	1/4 NPTF	0.25	1/2-20 UNF	1-14	0.09	1.06	2.0	2.97	3.22
2"	0.88	2.08	1.374	0.38	0.625	0.50	1.25	1/4 NPTF	0.31	1/2-20 UNF	1-1/4 †	0.12	1.19	–	▲	▲

▲ SR: 5.41" for 1" stroke, 7.41" for 2 " stroke, 8.66" for 3" stroke, 11.59" for 4" stroke.
SRM: 5.66" for 1" stroke, 7.66" for 2" stroke, 8.91" for 3 " stroke, 11.84" for 4" stroke.

* To determine lengths for half inch stroke increments, determine length for next highest whole number stroke and subtract a half inch.

** For each 0.50" of stroke

† No mounting nut

Style NR

Nose mount, spring return, hex rod

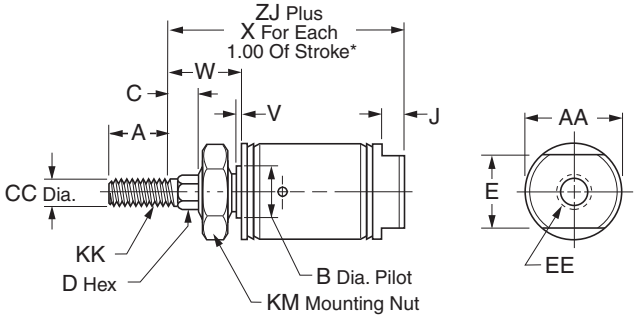

Bore size	SR	SRM	Std. stroke (in)	Max.. stroke (in)	SS rod std
7/16"	•		1/2, 1, 1-1/2, 2, 3, 4	6	✔
9/16"	•	•	1/2, 1, 1-1/2, 2, 3, 4	6	✔
3/4"	•	•	1/2, 1, 1-1/2, 2, 3, 4	6	✔
7/8"	•		1/2, 1, 1-1/2, 2, 3, 4	6	✔
1-1/16"	•	•	1/2, 1, 1-1/2, 2, 3, 4	6	✔
1-1/4"	•	•	1, 2, 3, 4	6	✔
1-1/2"	•	•	1/2, 1, 2, 3, 4	6	✔
1-3/4"	•	•	1/2, 1, 1-1/2, 2, 2-1/2, 3, 4	6	

Bore size	A	AA	B	C	CC	D	E	EE	J	KK	KM	V	W	X	SR ZJ	SRM ZJ
7/16"	0.50	–	0.374	0.25	0.188	3/16	–	#10-32	0.19	#10-32 UNF	3/8-24	0.05	0.56	0.94	1.56	–
9/16"	0.50	–	0.437	0.25	0.188	3/16	–	#10-32	0.19	#10-32 UNF	7/16-20	0.06	0.62	1.62	1.78	2.03
3/4"	0.50	–	0.499	0.25	0.250	1/4	–	1/8 NPTF	0.19	1/4-28 UNF	1/2-20	0.09	0.69	1.69	1.75	2.00
7/8"	0.50	–	0.624	0.25	0.250	1/4	–	1/8 NPTF	0.19	1/4-28 UNF	5/8-18	0.09	0.75	1.56	2.09	–
1-1/16"	0.50	1.12	0.624	0.25	0.312	3/8	0.88	1/8 NPTF	0.19	5/16-24 UNF	5/8-18	0.09	0.75	1.56	2.19	2.44
1-1/4"	0.88	1.34	0.749	0.25	0.437	7/16	0.88	1/8 NPTF	0.25	7/16-20 UNF	3/4-16	0.09	0.88	1.81	2.66	2.78
1-1/2"	0.88	1.56	0.749	0.38	0.437	7/16	0.88	1/8 NPTF	0.25	7/16-20 UNF	3/4-16	0.09	1.00	1.69	2.56	2.81
1-3/4"	0.88	1.84	1.031	0.38	0.500	1/2	1.25	1/4 NPTF	0.25	1/2-20 UNF	1-14	0.09	1.12	2.0	3.03	3.28

* To determine lengths for half inch stroke increments, determine length for next highest whole number stroke and subtract one half inch.

Mounting Style – NRP

Style NRP

Pivot & nose mount, spring return, hex rod

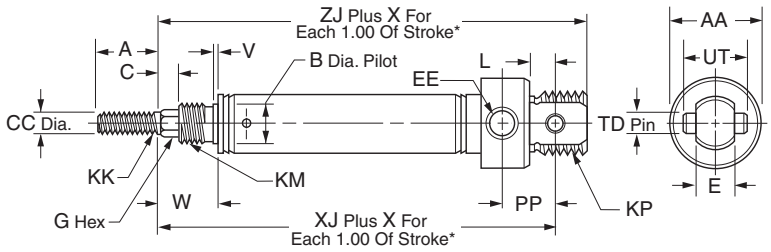

Bore sizes
7/16" *
3/4"

* No mounting nuts

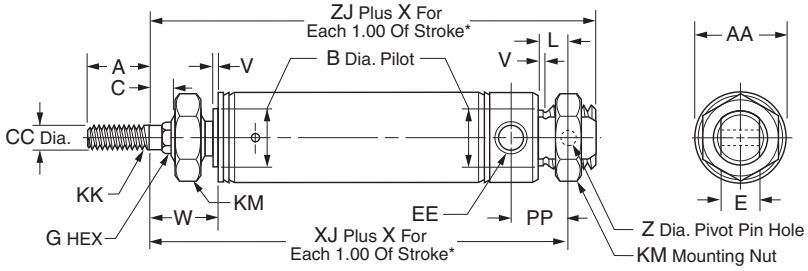

Bore sizes
9/16" *
7/8" *
1-1/16" *
1-1/4"
1-1/2" *
1-3/4"

* No mounting nuts

Bore size	SR	SRM	Std. stroke (in)	Max. stroke (in)	SS rod std	A	AA	B	C	CC	E	EE
7/16"	•		1/2, 1, 1-1/2, 2, 3, 4	6	✔	0.50	0.74	0.374	0.25	0.188	0.31	#10-32
9/16"	•	•	1/2, 1, 1-1/2, 2, 3, 4	6	✔	0.50	0.62	0.437	0.25	0.188	0.31	#10-32
3/4"	•	•	1, 2, 3, 4	6	✔	0.50	0.86	0.499	0.25	0.250	0.38	1/8 NPTF
7/8"	•		1, 2, 3, 4	6	✔	0.50	0.93	0.624	0.25	0.250	0.38	1/8 NPTF
1-1/16"	•	•	1, 2, 3, 4	6	✔	0.50	1.12	0.624	0.25	0.312	0.38	1/8 NPTF
1-1/4"	•	•	1, 2, 3, 4	6	✔	0.88	1.34	0.749	0.25	0.437	0.50	1/8 NPTF
1-1/2"	•	•	1, 2, 3, 4	6	✔	0.88	1.56	0.749	0.38	0.437	0.62	1/8 NPTF
1-3/4"	•	•	1/2, 1, 1-1/2, 2, 2-1/2, 3, 4	6		0.88	1.84	1.031	0.38	0.500	0.62	1/4 NPTF

Bore size	G HEX	KK	KM	KP	L	PP	TD	UT	V	W	X	SR XJ	SRM XJ	Z	SR ZJ	SRM ZJ
7/16"	3/16	#10-32 UNF	3/8-24	7/16-20 UNF	0.25	0.44	0.156	0.50	0.05	0.56	0.94	2.00	–	–	2.25	–
9/16"	3/16	#10-32 UNF	7/16-20	7/16-20 UNF	0.25	0.38	–	–	0.06	0.62	1.62	2.06	2.31	0.157	2.25	2.50
3/4"	1/4	1/4-28 UNF	1/2-20	5/8-18 UNF	0.34	0.62	0.250	0.75	0.09	0.69	1.69	2.53	2.78	–	2.81	3.06
7/8"	1/4	1/4-28 UNF	5/8-18	5/8-18 UNF	0.34	0.62	0.250	0.75	0.09	0.75	1.56	2.72	–	–	3.00	–
1-1/16"	3/8	5/16-24 UNF	5/8-18	5/8-18 UNF	0.34	0.62	0.250	0.75	0.09	0.75	1.56	2.78	3.03	–	3.06	3.31
1-1/4"	7/16	7/16-20 UNF	3/4-16	–	0.41	0.78	0.251	–	0.09	0.88	1.81	3.38	3.50	0.251	3.78	3.91
1-1/2"	7/16	7/16-20 UNF	3/4-16	–	0.50	0.81	0.375	1.00	0.09	1.00	1.69	3.25	3.50	–	3.62	3.87
1-3/4"	1/2	1/2-20 UNF	1-14	–	0.50	1.12	–	–	0.09	1.12	2.0	4.09	4.34	0.376	4.59	4.84

* To determine lengths for half inch stroke increments, determine length for next highest whole number stroke and subtract one half inch.

Parker Hannifin Corporation
Pneumatic Division
Richland, Michigan
www.parker.com/pneumatics

Style P

Pivot mount, spring return

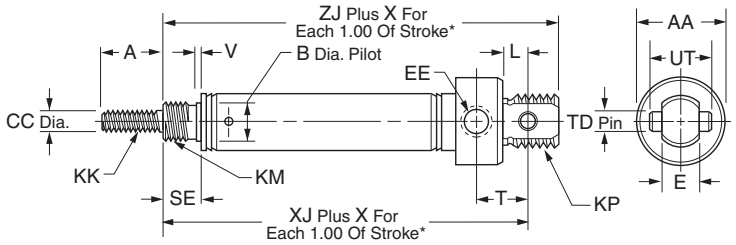

Bore sizes
5/16" *
7/16"
3/4"

* No mounting nuts

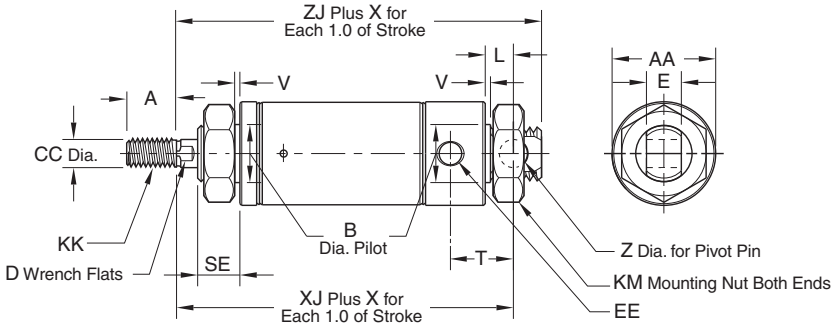

Bore sizes
9/16" *
7/8" *
1-1/16" *
1-1/4"
1-1/2" *
1-3/4"
2" *

* No mounting nuts

Bore size	SR	SRM	Std. stroke (in)	Max. stroke (in)	SS rod std	A	AA	B	CC	D	E	EE
5/16"	•		1/2, 1, 1-1/2, 2, 3, 4	4	✔	0.38	0.39	–	0.125	–	0.25	#10-32
7/16"	•		1/2, 1, 1-1/2, 2, 3, 4	6	✔	0.50	0.74	0.374	0.188	–	0.31	#10-32
9/16"	•	•	1/2, 1, 1-1/2, 2, 3, 4	6	✔	0.50	0.62	0.437	0.188	–	0.31	#10-32
3/4"	•	•	1/2, 1, 1-1/2, 2, 3, 4	6	✔	0.50	0.86	0.499	0.250	–	0.38	1/8 NPTF
7/8"	•		1/2, 1, 1-1/2, 2, 3, 4	6	✔	0.50	0.93	0.624	0.250	–	0.38	1/8 NPTF
1-1/16"	•	•	1/2, 1, 1-1/2, 2, 3, 4	6	✔	0.50	1.12	0.624	0.312	0.25	0.38	1/8 NPTF
1-1/4"	•	•	1, 2, 3, 4	6	✔	0.75	1.34	0.749	0.437	0.38	0.50	1/8 NPTF
1-1/2"	•	•	1, 2, 3, 4	6	✔	0.75	1.56	0.749	0.437	0.38	0.62	1/8 NPTF
1-3/4"	•	•	1/2, 1, 1-1/2, 2, 2-1/2, 3, 4	6		0.88	1.84	1.031	0.500	7/16	0.62	1/4 NPTF
2"	•	•	–	4		0.88	2.08	1.374	0.625	0.50	0.75	1/4 NPTF

Bore size	KK	KM	KP	L	SE	T	TD	UT	V	X	SR XJ	SRM XJ	Z	SR ZJ	SRM ZJ
5/16"	#5-40 UNC	3/8-24	–	0.34	0.25	0.34	–	–	–	0.75	1.52	–	0.125	1.68	–
7/16"	#10-32 UNF	3/8-24	7/16-20 UNF	0.25	0.31	0.44	0.156	0.50	0.05	0.94	1.75	–	–	2.00	–
9/16"	#10-32 UNF	7/16-20	7/16-20 UNF	0.25	0.38	0.38	–	–	0.06	1.62	1.81	2.06	0.157	2.00	2.25
3/4"	1/4-28 UNF	1/2-20	5/8-18 UNF	0.34	0.44	0.62	0.250	0.75	0.09	1.69	2.28	2.53	–	2.56	2.81
7/8"	1/4-28 UNF	5/8-18	5/8-18 UNF	0.34	0.50	0.62	0.250	0.75	0.09	1.56	2.47	–	–	2.75	–
1-1/16"	5/16-24 UNF	5/8-18	5/8-18 UNF	0.34	0.50	0.62	0.250	0.75	0.09	1.56	2.66	2.91	–	2.94	3.19
1-1/4"	7/16-20 UNF	3/4-16	–	0.41	0.63	0.78	–	–	0.09	1.81	3.38	3.91	0.251	3.78	3.50
1-1/2"	7/16-20 UNF	3/4-16	–	0.50	0.63	0.81	0.375	1.00	0.09	1.81	3.12	3.37	–	3.50	3.75
1-3/4"	1/2-20 UNF	1-14	–	0.50	0.75	1.12	–	–	0.09	2.0	4.03	4.28	0.376	4.53	4.78
2"	1/2-20 UNF	1-1/4-12	–	0.56	0.81	1.03	–	–	0.12	–	■	✷	–	▲	◆

■ 6.34" for 1" stroke, 8.34" for 2" stroke, 9.59" for 3" stroke, 12.53" for 4" stroke*

▲ 6.78" for 1" stroke, 8.78" for 2" stroke, 10.03" for 3" stroke, 12.97" for 4" stroke*

✷ 6.59" for 1" stroke, 8.59" for 2" stroke, 9.84" for 3" stroke, 12.78" for 4" stroke*

◆ 7.03" for 1" stroke, 9.03" for 2" stroke, 10.28" for 3" stroke, 13.22" for 4" stroke*

* To determine lengths for half inch stroke increments, determine length for next highest whole number stroke and subtract a half inch.

Style R

Nose mount, spring extended

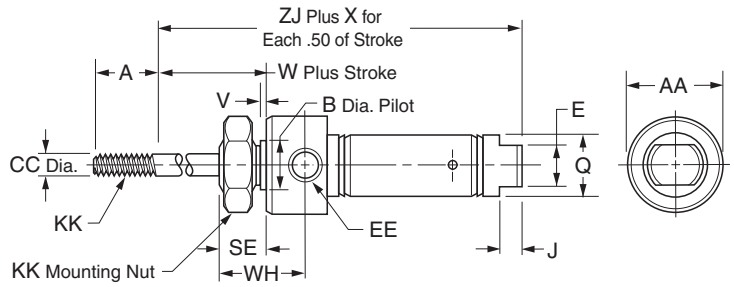

Bore sizes
5/16
7/16"
3/4"

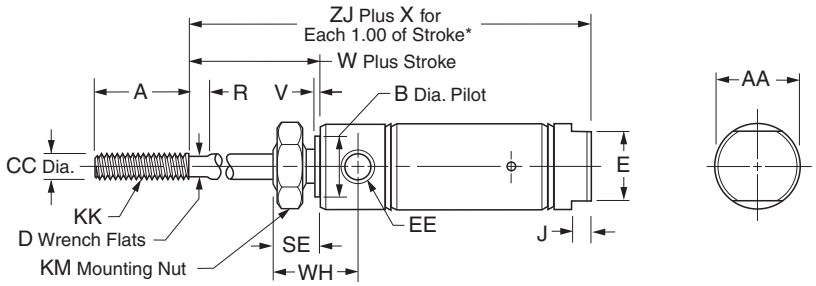

Bore sizes
9/16"
7/8"
1-1/16"
1-1/4"
1-1/2"
1-3/4"
2" *

* No mounting nuts

Bore size	SR	SRM	Std. stroke (in)	Max. stroke (in)	SS rod std	A	AA	B	CC	D	E
5/16"	•		1/2, 1, 1-1/2, 2, 2-1/2, 3	4	✔	0.38	0.50 SQ.	–	0.125	–	–
7/16"	•		1/2, 1, 1-1/2, 2, 3	6	✔	0.50	0.74	0.437	0.188	–	0.38
9/16"	•	•	1/2, 1, 1-1/2, 2, 3	6	✔	0.50	0.62	0.437	0.188	–	0.50
3/4"	•	•	1/2, 1, 2, 3, 4	6	✔	0.50	0.86	0.624	0.250	–	–
7/8"	•		1/2, 1, 2, 3, 4	6	✔	0.50	0.93	0.624	0.250	–	–
1-1/16"	•	•	1/2, 1, 1-1/2, 2, 3, 4	6	✔	0.50	1.12	0.624	0.312	0.25	–
1-1/4"	•	•	1, 2, 3, 4	6	✔	0.75	1.34	0.749	0.437	0.38	–
1-1/2"	•	•	1, 2, 3, 4	6	✔	1.25	1.56	0.749	0.437	0.38	0.88
1-3/4"	•	•	1/2, 1, 1-1/2, 2, 2-1/2, 3, 4	6		0.88	1.84	1.031	0.500	7/16	–
2"	•	•	–	4		0.88	2.08	1.374	0.625	0.50	–

Bore size	EE	J	KK	KM	Q	R	SE	V	W	WH	X	SR ZJ	SRM ZJ
5/16"	#10-32	–	#5-40 UNC	3/8-24	0.36	–	0.31	–	0.31	0.47	1.25	1.49	–
7/16"	#10-32	0.19	#10-32 UNF	7/16-20	0.50	–	0.38	0.05	0.38	0.72	1.44	1.94	–
9/16"	#10-32	0.19	#10-32 UNF	7/16-20	0.62	–	0.38	0.05	0.38	0.78	2.62	2.00	2.25
3/4"	1/8 NPTF	–	1/4-28 UNF	5/8-18	0.81	–	0.50	0.09	0.50	0.97	2.69**	2.31	2.56
7/8"	1/8 NPTF	–	1/4-28 UNF	5/8-18	–	–	0.50	0.09	0.50	0.97	2.56	2.31	–
1-1/16"	1/8 NPTF	–	5/16-24 UNF	5/8-18	–	0.12	0.50	0.09	0.62	1.06	2.81	2.62	2.87
1-1/4"	1/8 NPTF	–	7/16-20 UNF	3/4-16	–	0.25	0.62	0.09	0.88	1.38	2.81	3.47	3.60
1-1/2"	1/8 NPTF	0.25	7/16-20 UNF	3/4-16	–	0.25	0.62	0.09	0.88	1.25	3.00	3.19	3.44
1-3/4"	1/4 NPTF	–	1/2-20 UNF	1-14	–	–	0.75	0.09	1.06	1.63	3.0	4.03	4.28
2"	1/4 NPTF	–	1/2-20 UNF	1-1/4-12	–	0.38	0.81	0.12	1.19	1.47	–	▲	◆

▲ 7.11" for 1" stroke, 10.11" for 2" stroke, 12.34" for 3" stroke, 16.34" for 4" stroke.*

◆ 7.36" for 1" stroke, 10.36" for 2" stroke, 12.59" for 3" stroke, 16.59" for 4" stroke*

* To determine lengths for half inch stroke increments, determine length for next highest whole number stroke and subtract one half inch.

** For each 1.00" of stroke.

Style RP

Pivot and nose mount, spring extended

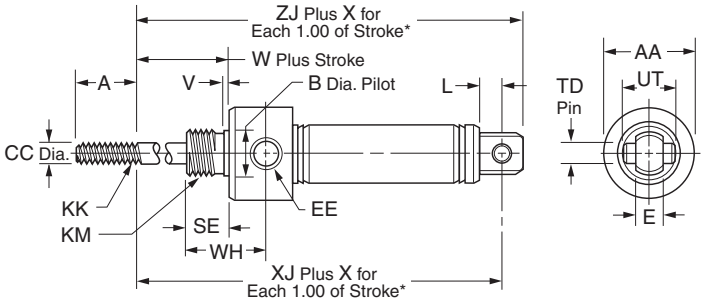

Bore sizes
5/16" *
7/16"
3/4"

* No mounting nuts

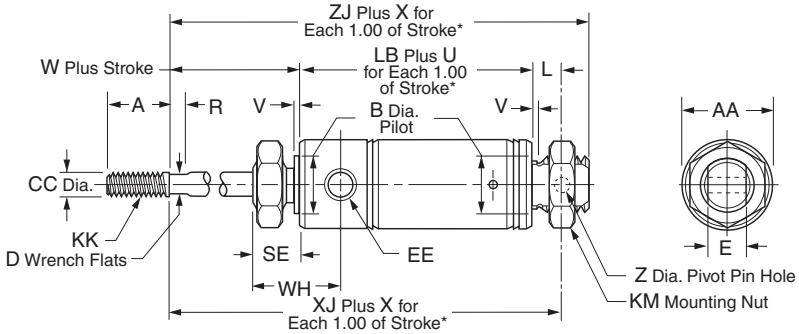

Bore sizes
9/16" *
7/8" *
1-1/16" *
1-1/4"
1-1/2" *
1-3/4"
2" *

* No mounting nuts

Bore size	SR	SRM	Std. stroke (in)	Max. stroke (in)	SS rod std	A	AA	B	CC	D	E	EE	KK
5/16"	•		1/2, 1, 1-1/2, 2, 2-1/2, 3	4	✔	0.38	0.50 SQ.	–	0.125	–	0.25	#10-32	#5-40 UNC
7/16"	•		1/2, 1, 1-1/2, 2, 3	6	✔	0.50	0.74	0.437	0.188	–	0.31	#10-32	#10-32 UNF
9/16"	•	•	1/2, 1, 1-1/2, 2, 3	6	✔	0.50	0.62	0.437	0.188	–	0.31	#10-32	#10-32 UNF
3/4"	•	•	1/2, 1, 2, 3, 4	6	✔	0.50	0.86	0.624	0.250	–	0.38	1/8 NPTF	1/4-28 UNF
7/8"	•		1/2, 1, 2, 3, 4	6	✔	0.50	0.93	0.624	0.250	–	0.38	1/8 NPTF	1/4-28 UNF
1-1/16"	•	•	1/2, 1, 1- 1/2, 2, 3, 4	6	✔	0.50	1.12	0.624	0.312	0.25	0.38	1/8 NPTF	5/16-24 UNF
1-1/4"	•	•	1, 2, 3, 4	6	✔	0.75	1.34	0.749	0.437	0.38	0.50	1/8 NPTF	7/16-20 UNF
1-1/2"	•	•	1, 2, 3, 4	6	✔	1.25	1.56	0.749	0.437	0.38	0.62	1/8 NPTF	7/16-20 UNF
2"	•	•	–	4		.88	2.08	1.374	0.625	0.50	0.75	1/4 NPTF	1/2-20 UNF

Bore size	KM	L	LB	R	SE	TD	U	UT	V	W	WH	X	SR XJ	SRM XJ	Z	SR ZJ	SRM ZJ
5/16"	3/8-24	0.19	–	–	0.31	–	–	–	–	0.31	0.47	1.25	1.88	–	–	2.04	–
7/16"	7/16-20	0.25	–	–	0.38	0.156	–	0.50	0.05	0.38	0.72	1.44	2.38	–	–	2.62	–
9/16"	7/16-20	0.25	–	–	0.38	–	–	–	0.06	0.38	0.78	2.62	2.28	2.53	0.157	2.47	2.72
3/4"	5/8-18	0.34	–	–	0.50	0.250	–	0.75	0.09	0.50	0.97	2.69	2.44	2.69	–	2.72	2.97
7/8"	5/8-18	0.34	–	–	0.50	0.250	–	0.75	0.09	0.50	0.97	2.56	2.63	–	–	2.91	–
1-1/16"	5/8-18	0.34	–	0.12	0.50	0.250	–	0.75	0.09	0.62	1.06	2.81	2.78	3.03	–	3.06	3.31
1-1/4"	3/4-16	0.41	2.47	0.25	0.62	–	1.81	–	0.09	0.88	1.38	2.81	3.78	3.91	0.251	4.16	4.28
1-1/2"	3/4-16	0.50	–	0.25	0.62	0.375	–	1.00	0.09	0.88	1.25	3.00	3.88	4.13	–	4.25	4.50
2"	1-1/4 -12	0.56	–	0.38	0.81	–	–	–	0.12	1.19	1.47	–	■	✷	0.376	▲	◆

■ 8.05" for 1" stroke, 11.05" for 2" stroke, 13.28" for 3" stroke, 17.28" for 4" stroke*
▲ 8.50" for 1" stroke, 11.50" for 2" stroke, 13.72" for 3" stroke, 17.72" for 4" stroke*
✷ 8.31" for 1" stroke, 11.31" for 2" stroke, 13.53" for 3" stroke, 17.53" for 4" stroke*
◆ 8.75" for 1" stroke, 11.75" for 2" stroke, 13.97" for 3" stroke, 17.97" for 4" stroke*
* To determine lengths for half inch stroke increments, determine length for next highest whole number stroke and subtract one half inch.

Style D

Nose mount, double acting

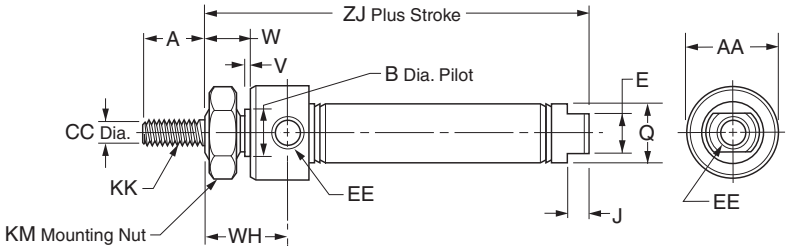

Bore sizes
5/16"
7/16"
3/4"

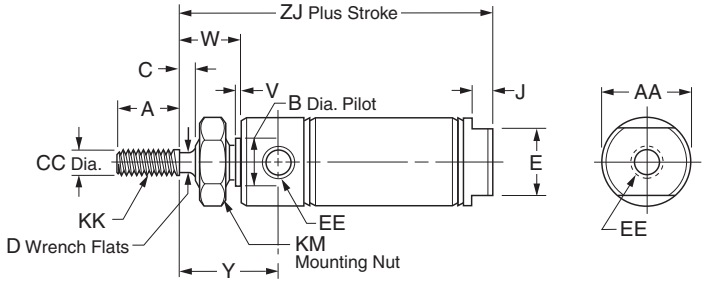

Bore sizes
9/16"
7/8"
1-1/16"
1-1/4"
1-1/2"
1-3/4"
2" *
2-1/2" *
3" *

* No mounting nuts

Bore size	SR	SRM	SRD SRDM	Std. stroke (in)	Max. stroke (in)	SS rod std	A	AA	B	C	CC
5/16"	•			1/2, 1, 1-1/2, 2, 2-1/2, 3, 4	4	✔	0.38	0.50 SQ.	–	–	0.125
7/16"	•			1/2, 1, 1-1/2, 2, 3, 4	12	✔	0.50	0.74	0.437	–	0.188
9/16"	•	•	•	1/2, 1, 1-1/2, 2, 3, 4	12	✔	0.50	0.62	0.437	–	0.188
3/4"	•	•	•	1/2, 1, 2, 2-1/2, 3, 4, 5, 6, 8, 10	12	✔	0.50	0.86	0.624	–	0.250
7/8"	•			1/2, 1, 2, 3, 4, 5, 6	12	✔	0.50	0.93	0.624	–	0.250
1-1/16"	•	•	•	1/2, 1, 1-1/2, 2, 2-1/2, 3, 4, 5, 6, 8, 10, 12	12	✔	0.50	1.12	0.624	0.12	0.312
1-1/4"	•	•		1, 2, 3, 4, 5, 6	12	✔	0.75	1.34	0.749	0.25	0.437
1-1/2"	•	•	•	1/2, 1, 2, 3, 4, 5, 6, 8, 10, 12	12	✔	0.75	1.56	0.749	0.25	0.437
1-3/4"	•	•		1/2, 1, 1-1/2, 2, 2-1/2, 3, 4, 5, 6	12		0.88	1.84	1.031	0.31	0.500
2"	•	•	•	–	12		0.88	2.08	1.374	0.38	0.625
2-1/2"	•	•		–	12		0.88	2.62	1.500	0.38	0.625
3"	•			–	12		1.25	3.16	1.630	0.38	0.750

Bore size	D	E	EE	J	KK	KM	Q	V	W	WH	Y	SR ZJ	SRM ZJ
5/16"	–	–	#10-32	–	#5-40 UNC	3/8-24	0.36	–	0.31	0.47	–	1.64	–
7/16"	–	0.38	#10-32	0.19	#10-32 UNF	7/16-20	0.50	0.05	0.38	0.72	–	2.12	–
9/16"	–	0.50	#10-32	0.19	#10-32 UNF	7/16-20	–	0.06	0.38	0.78	–	2.28	2.53
3/4"	–	0.62	1/8 NPTF	0.19	1/4-28 UNF	5/8-18	0.81	0.09	0.50	0.97	–	2.97	2.97
7/8"	–	0.62	1/8 NPTF	0.19	1/4-28 UNF	5/8-18	–	0.09	0.50	0.97	–	2.94	–
1-1/16"	0.25	0.88	1/8 NPTF	0.19	5/16-24 UNF	5/8-18	–	0.09	0.62	–	1.19	3.25	3.41
1-1/4"	0.38	0.88	1/8 NPTF	0.25	7/16-20 UNF	3/4-16	–	0.09	0.88	–	1.62	4.00	4.03
1-1/2"	0.38	0.88	1/8 NPTF	0.25	7/16-20 UNF	3/4-16	–	0.09	0.88	–	1.50	3.69	3.94
1-3/4"	7/16	1.25	1/4 NPTF	0.25	1/2-20 UNF	1-14	–	0.09	1.06	1.63	–	4.69	4.94
2"	0.50	1.25	1/4 NPTF	0.31	1/2-20 UNF	1-1/4-12	–	0.12	1.19	–	1.84	4.69	4.97
2-1/2"	1/2	1.75	1/4 NPTF	0.31	1/2-20 UNF	1-3/8-12	–	0.13	1.19	–	1.84	4.69	4.69
3"	5/8	2.00	3/8 NPTF	0.31	5/8-18 UNF	1-1/2-12	–	0.19	1.38	–	2.09	5.25	–

Style DP

Pivot and nose mount, double acting, pivot pin

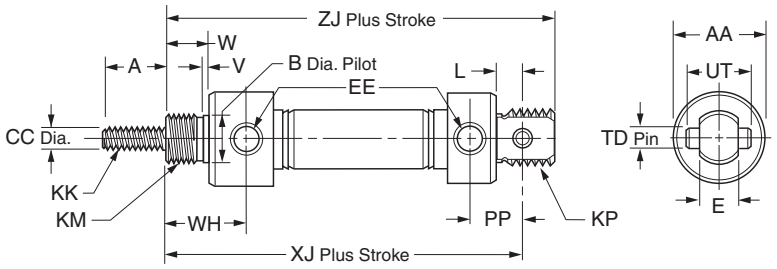

Bore sizes
5/16"
7/16"
3/4"

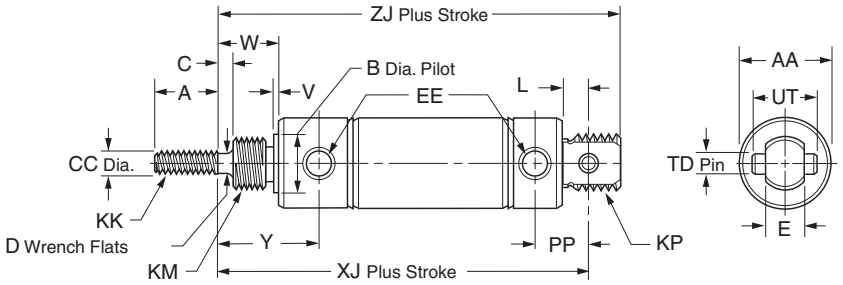

Bore sizes
1-1/16"
1-1/2"

Bore size	SR	SRM	Std. stroke (in)	Max. stroke (in)	SS rod	A	AA	B	CC	D	E
7/16"	•		1/2, 1, 1-1/2, 2, 3, 4	12	✔	0.50	0.74	0.437	0.188	–	0.31
3/4"	•	•	1/2, 1, 2, 2-1/2, 3, 4, 5, 6, 8, 10	12	✔	0.50	0.86	0.624	0.250	–	0.38
1-1/16"	•	•	1/2, 1, 1-1/2, 2, 2-1/2, 3, 4, 5, 6, 8, 10, 12	12	✔	0.50	1.12	0.624	0.312	0.25	0.38
1-1/2"	•	•	1, 2, 3, 4, 5, 6, 8, 10, 12	12	✔	0.75	1.56	0.749	0.437	0.38	0.62

Bore size	EE	KK	KM	KP	L	PP	TD	UT	V	W	WH	SR XJ	SRM XJ	Y	SR ZJ	SRM ZJ
7/16"	#10-32	#10-32 UNF	7/16-20	7/16-20 UNF	0.25	0.44	0.156	0.50	0.05	0.38	0.72	2.56	–	–	2.81	–
3/4"	1/8 NPTF	1/4-28 UNF	5/8-18	5/8-18 UNF	0.34	0.62	0.250	0.75	0.09	0.50	0.97	3.75	3.75	–	4.03	4.03
1-1/16"	1/8 NPTF	5/16-24 UNF	5/8-18	5/8-18 UNF	0.34	0.62	0.250	0.75	0.09	0.62	–	3.84	4.00	1.19	4.12	4.28
1-1/2"	1/8 NPTF	7/16-20 UNF	3/4-16	–	0.50	0.81	0.375	1.00	0.09	0.87	–	4.38	4.63	1.50	4.75	5.00

Style DXP

Pivot & nose mount, double acting, no pivot pin

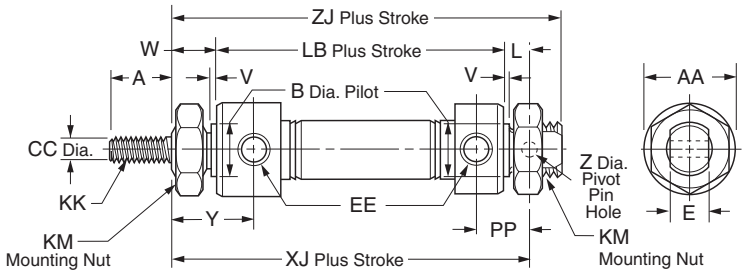

Bore sizes
5/16"
7/16"
3/4"

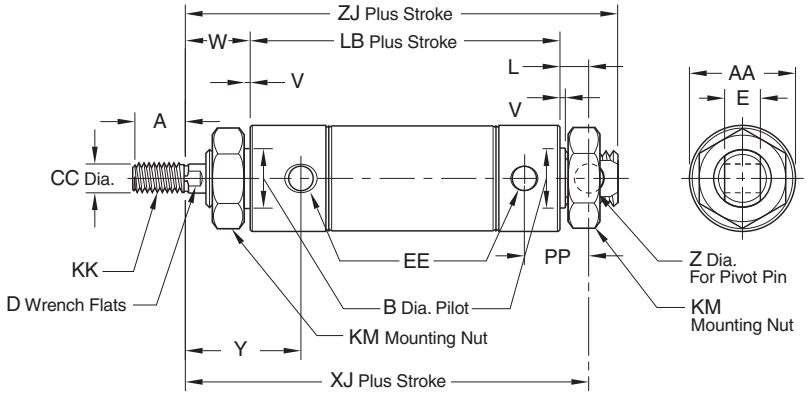

Bore sizes
9/16" *
7/8"
1-1/16"
1-1/4"
1-1/2"
1-3/4"
2" *
2-1/2" *
3" *

* No mounting nuts

Bore size	SR	SRM	SRD SRDM	Std. stroke (in)	Max. stroke (in)	SS rod std	A	AA	B	CC	D	E
5/16"	•			1/2, 1, 1-1/2, 2, 2-1/2, 3, 4	4	✔	0.38	0.50 SQ.	–	0.125	–	0.25
7/16"	•			1/2, 1, 1-1/2, 2, 3, 4	12	✔	0.50	0.74	0.437	0.188	–	0.31
9/16"	•	•	•	1/2, 1, 1-1/2, 2, 3, 4	12	✔	0.50	0.62	0.437	0.188	–	0.31
3/4"	•	•	•	1, 2, 3, 4, 5, 6, 8, 10	32	✔	0.50	0.86	0.624	0.250	–	0.38
7/8"	•			1, 2, 3, 4, 5, 6, 8, 10	32	✔	0.50	0.93	0.624	0.250	–	0.38
1-1/16"	•	•	•	1/2, 1, 1-1/2, 2, 2-1/2, 3, 4, 5, 6, 8, 10, 12	32	✔	0.50	1.12	0.624	0.312	0.25	0.38
1-1/4"	•	•		1, 2, 3, 4, 5, 6, 7, 8, 10, 12	32	✔	0.75	1.34	0.749	0.437	0.38	0.50
1-1/2"	•	•	•	–	32	✔	0.75	1.56	0.749	0.437	0.38	0.62
1-3/4"	•	•		1, 2, 3, 4, 5, 6, 8, 10, 12	32		0.88	1.84	1.031	0.500	7/16	0.62
2"	•	•	•	–	32		0.88	2.08	1.374	0.625	0.50	0.75
2-1/2"	•	•		–	32		0.88	2.62	1.500	0.625	1/2	0.75
3"	•			–	32		1.25	3.16	1.630	0.750	5/8	0.88

Bore size	EE	KK	KM	L	LB	PP	V	W	SR XJ	SRM XJ	Y	Z	SR ZJ	SRM ZJ
5/16"	#10-32	#5-40 UNC	3/8-24	0.19	–	0.34	–	0.31	2.03	–	–	0.125	2.19	–
7/16"	#10-32	#10-32 UNF	7/16-20	0.25	1.94	0.44	0.05	0.38	2.56	–	0.72	0.157	2.81	–
9/16"	#10-32	#10-32 UNF	7/16-20	0.25	–	0.38	0.06	0.38	2.56	2.81	0.78	0.157	2.75	3.00
3/4"	1/8 NPTF	1/4-28 UNF	5/8-18	0.34	2.91	0.62	0.09	0.50	3.75	3.75	0.97	0.251	4.03	4.03
7/8"	1/8 NPTF	1/4-28 UNF	5/8-18	0.34	–	0.62	0.09	0.50	3.56	–	0.97	0.251	3.84	–
1-1/16"	1/8 NPTF	5/16-24 UNF	5/8-18	0.34	–	0.62	0.09	0.62	3.84	–	1.19	0.251	4.12	4.28
1-1/4"	1/8 NPTF	7/16-20 UNF	3/4-16	0.41	–	0.78	0.09	0.88	4.72	4.75	1.62	0.251	5.12	5.16
1-1/2"	1/8 NPTF	7/16-20 UNF	3/4-16	0.50	–	0.81	0.09	0.88	4.38	4.63	1.50	0.376	4.75	5.00
1-3/4"	1/4 NPTF	1/2-20 UNF	1-14	0.50	4.19 SR 4.44 SRM	1.12	0.09	1.06	5.75	6.00	1.94	0.376	6.25	6.50
2"	1/4 NPTF	1/2-20 UNF	1-1/4-12	0.56	–	1.03	0.12	1.19	5.62	5.91	–	0.376	6.06	6.34
2-1/2"	1/4 NPTF	1/2-20 UNF	1-3/8-12	0.56	–	1.03	0.13	1.19	5.62	5.62	1.84	0.376	6.06	6.06
3"	3/8 NPTF	5/8-18 UNF	1-1/2-12	0.81	–	1.34	0.19	1.38	6.50	–	2.09	0.500	7.12	–

Style DX

Threaded both ends, double acting

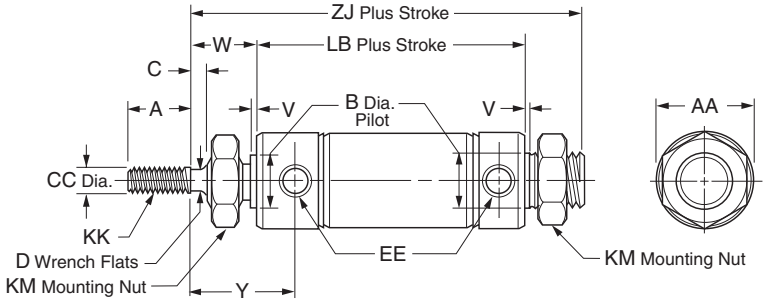

Bore size	SR	SRM	Std. stroke (in)	Max. stroke (in)	SS rod std
7/16" *	•		1/2, 1, 1-1/2, 2, 3, 4	12	✔
9/16" *	•	•	1/2, 1, 1-1/2, 2, 3, 4	12	✔
3/4" *	•	•	1, 2, 3, 4, 5, 6, 8, 10	32	✔
7/8" *	•	•	1, 2, 3, 4, 5, 6, 8, 10	32	✔
1-1/16" *	•	•	1/2, 1, 1-1/2, 2, 2-1/2, 3, 4, 5, 6, 8, 10, 12	32	✔
1-1/4" *	•	•	1, 2, 3, 4, 5, 6, 7, 8, 10, 12	32	✔
1-1/2"	•	•	1, 2, 3, 4, 5, 6, 8, 10, 12	32	✔
2" *	•	•	–	32	

Bore size	A	AA	B	C	CC	D	EE	KK	KM	SR LB	SRM LB	V	W	Y	SR ZJ	SRM ZJ
7/16" *	0.50	0.74	0.437	–	0.188	–	#10-32	#10-32 UNF	7/16-20	1.94	–	0.05	0.38	0.72	2.81	–
9/16" *	0.50	0.62	0.437	–	0.188	–	#10-32	#10-32 UNF	7/16-20	–	–	0.06	0.38	0.78	2.75	–
3/4" *	0.50	0.86	0.624	–	0.250	–	1/8 NPTF	1/4-28 UNF	5/8-18	2.91	–	0.09	0.50	0.97	4.03	–
7/8" *	0.50	0.93	0.624	–	0.250	–	1/8 NPTF	1/4-28 UNF	5/8-18	–	–	0.09	0.50	0.97	3.84	–
1-1/16" *	0.50	1.12	0.624	0.12	0.312	0.25	1/8 NPTF	5/16-24 UNF	5/8-18	–	–	0.09	0.62	1.19	4.12	–
1-1/4" *	0.75	0.34	0.749	0.25	0.437	0.38	1/8 NPTF	7/16-20 UNF	3/4-16	–	–	0.09	0.88	1.62	5.12	–
1-1/2"	0.75	1.56	0.749	0.25	0.437	0.38	1/8 NPTF	7/16-20 UNF	3/4-16	3.00	–	0.09	0.88	1.50	4.50	–
2" *	0.88	2.08	1.374	0.38	0.625	0.50	1/4 NPTF	1/2-20 UNF	1-1/4-12	–	–	0.12	1.19	–	6.06	–

* Available upon request. Please consult factory.

Style KDX

Threaded both ends, double acting, double rod

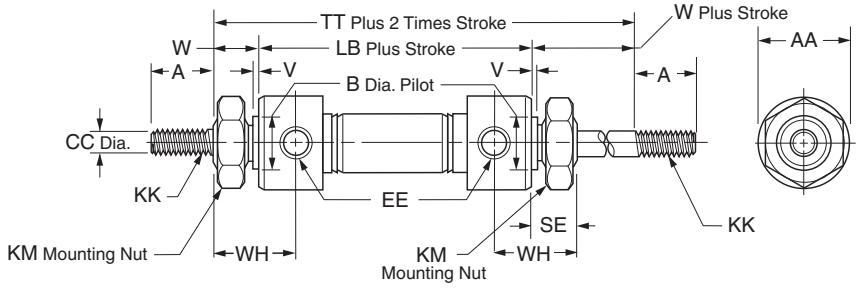

Bore sizes
7/16"
3/4"

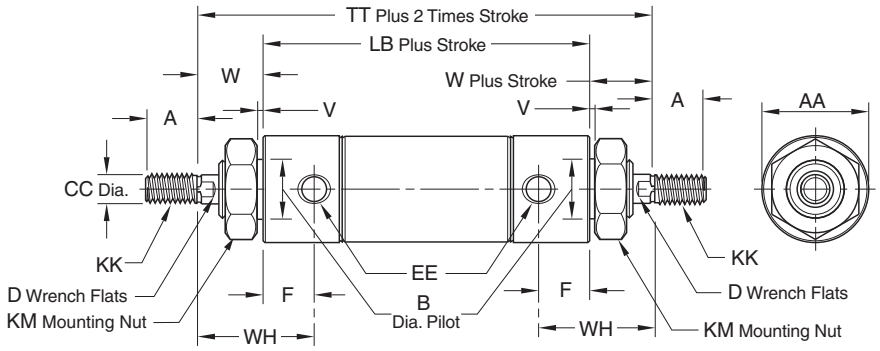

Bore sizes
9/16" *
7/8"
1-1/16"
1-1/4"
1-1/2"
1-3/4"
2" *
2-1/2" *
3" *

* No mounting nuts

Bore size	SR	SRM	SRD SRDM	Std. stroke (in)	Max. stroke (in)	SS rod	A	AA	B	CC
7/16"	•			1/2, 1, 1-1/2, 2, 3, 4	6	✔	0.50	0.74	0.437	0.188
9/16"	•	•	•	1/2, 1, 1-1/2, 2, 3, 4	6	✔	0.50	0.62	0.437	0.188
3/4"	•	•	•	1, 2, 3, 4, 5, 6	12	✔	0.50	0.86	0.624	0.250
7/8"	•			1, 2, 3, 4, 6	12	✔	0.50	0.93	0.624	0.250
1-1/16"	•	•	•	1, 2, 3, 4, 5, 6	12	✔	0.50	1.12	0.624	0.312
1-1/4"	•	•	•	1, 2, 3, 4, 5, 6	12	✔	0.75	1.34	0.749	0.437
1-1/2"	•	•	•	1, 2, 3, 4, 5, 6	12	✔	0.75	1.56	0.749	0.437
1-3/4"	•	•		1, 2, 3, 4, 5, 6	12	✔	0.88	1.84	1.031	0.500
2"	•	•	•	–	12	✔	0.88	2.08	1.374	0.625
2-1/2"	•	•		–	18	✔	0.88	2.62	1.500	0.625
3"	•			–	12	✔	1.25	3.16	1.630	0.750

Bore size	D	EE	F	KK	KM	SR LB	SRM LB	SE	SR TT	SRM TT	V	W	WH
7/16"	–	#10-32	0.34	#10-32 UNF	7/16-20	2.06	–	0.38	2.81	–	0.05	0.38	0.72
9/16"	–	#10-32	0.40	#10-32 UNF	7/16-20	2.19	2.44	0.38	2.94	3.19	0.06	0.38	0.78
3/4"	–	1/8 NPTF	0.47	1/4-28 UNF	5/8-18	3.00	3.00	0.50	4.00	4.00	0.09	0.50	0.97
7/8"	–	1/8 NPTF	0.47	1/4-28 UNF	5/8-18	2.91	–	0.50	3.91	–	0.09	0.50	0.97
1-1/16"	0.25	1/8 NPTF	0.56	5/16-24 UNF	5/8-18	2.75	3.28	0.50	4.00	4.53	0.09	0.62	1.19
1-1/4"	0.38	1/8 NPTF	0.75	7/16-20 UNF	3/4-16	3.81	3.84	0.63	5.56	5.59	0.09	0.88	1.62
1-1/2"	0.38	1/8 NPTF	0.62	7/16-20 UNF	3/4-16	3.38	3.63	0.63	5.12	5.38	0.09	0.88	1.50
1-3/4"	7/16	1/4 NPTF	0.88	1/2-20 UNF	1-14	4.44	4.69	0.75	6.56	6.81	0.09	1.06	1.94
2"	0.50	1/4 NPTF	0.65	1/2-20 UNF	1-1/4-12	4.19	4.47	–	6.56	6.84	0.12	1.19	1.84
2-1/2"	1/2	1/4 NPTF	0.65	1/2-20 UNF	1-3/8-12	4.19	4.19	–	6.56	6.56	0.13	1.19	1.84
3"	5/8	3/8 NPTF	0.71	5/8-18 UNF	1-1/2-12	4.56	–	–	7.31	–	0.19	1.38	2.09

Style KDXH

Threaded both ends, double rod, hollow rod

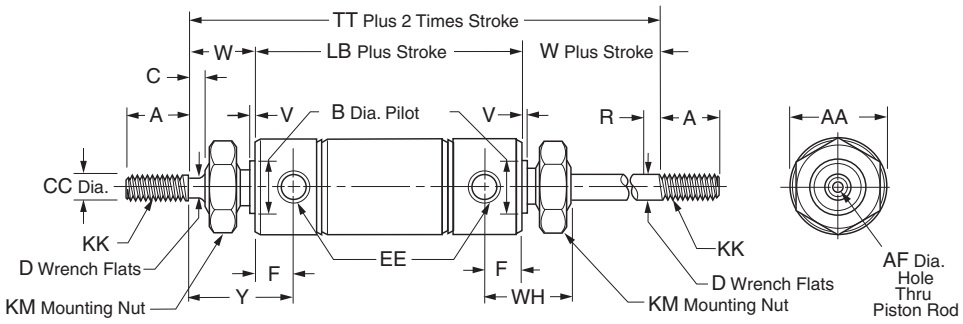

Bore size	SR	SRM	Std. stroke (in)	Max. stroke (in)	SS rod	A	AA	AF	B	C	CC
1-1/16"	•	•	1, 2, 3, 4, 5, 6	12	N/A	0.50	1.12	0.187	0.624	0.12	0.312
1-1/4"	•	•	1, 2, 3, 4, 5, 6	12	N/A	0.75	1.34	0.250	0.749	0.25	0.437
1-1/2"	•	•	1, 2, 3, 4, 5, 6	12	N/A	0.75	1.56	0.250	0.749	0.25	0.437
1-3/4"	•	•	1, 2, 3, 4, 5, 6	12	N/A	0.88	1.84	0.328	1.031	0.38	0.500

Bore						LB			TT					
size	D	EE	F	KK	KM	SR	SRM	R	SR	SRM	V	W	WH	Y
1-1/16"	0.25	1/8 NPTF	0.56	5/16-24 UNF	5/8-18	2.75	3.28	0.12	4.00	4.53	0.09	0.62	1.06	1.19
1-1/4"	0.38	1/8 NPTF	0.75	7/16-20 UNF	3/4-16	3.81	3.84	0.25	5.56	5.59	0.09	0.88	1.38	1.62
1-1/2"	0.38	1/8 NPTF	0.62	7/16-20 UNF	3/4-16	3.38	3.63	0.25	5.12	5.38	0.09	0.88	1.25	1.50
1-3/4"	7/16	1/4 NPTF	0.88	1/2-20 UNF	1-14	4.44	4.69	–	6.56	6.81	0.09	1.06	1.63	1.63

Style A

Nose mount, spring return, head adjustable stroke

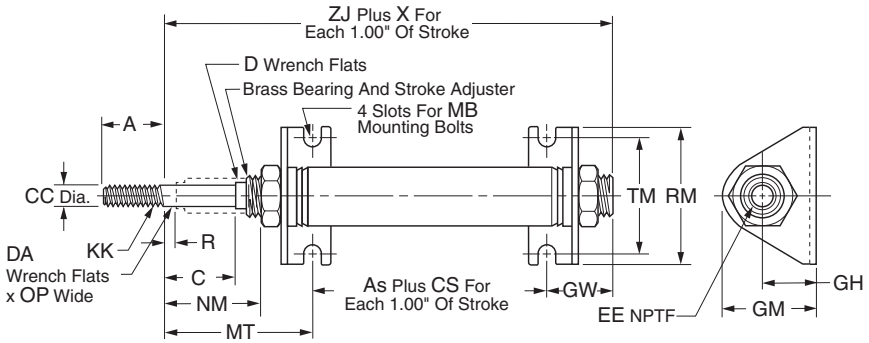

Bore size	SR	SRM	Std. stroke	Max. stroke (in)	SS rod std	A	AS	C	CC	CS	D
3/4"	•		Stroke adjustment in 1" increments to 3": 1" stroke adjusts 0-1" 2" stroke adjusts 1-2" 3" stroke adjusts 2-3"	6	✔	0.50	–	1.19	0.250	1.69	–
1-1/16"	•			6	✔	0.50	0.32	1.25	0.312	1.56	0.25
1-1/2"	•			6	✔	0.75	0.19	1.25	0.437	2.00	0.62

Bore size	EE	GH	GM	GW	KK	MB	MT	NM	OP	R	RM	TM	X	ZJ
3/4"	1/8 NPTF	0.81	1.38	0.88	1/4-28 UNF	0.250	2.38	1.44	–	0.19	1.88	1.50	1.69	3.12
1-1/16"	1/8 NPTF	0.81	1.38	0.93	5/16-24 UNF	0.250	2.38	1.44	0.12	0.25	1.88	1.50	1.56	3.63
1-1/2"	1/8 NPTF	1.00	1.78	1.25	7/16-20 UNF	0.250	2.56	1.50	–	0.25	2.50	1.88	2.00	4.00

Style RA

Nose mount, spring extend, cap adjustable stroke

Bore sizes
3/4"

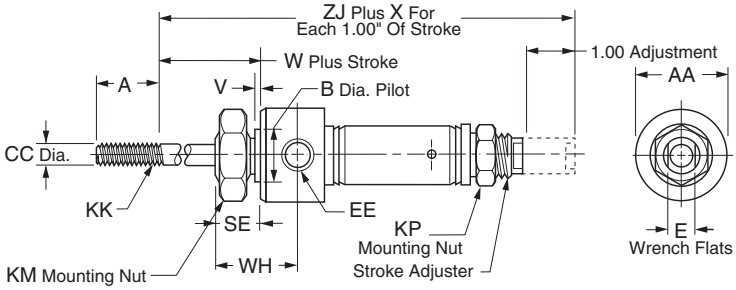

Bore sizes
1-1/16"
1-1/2"

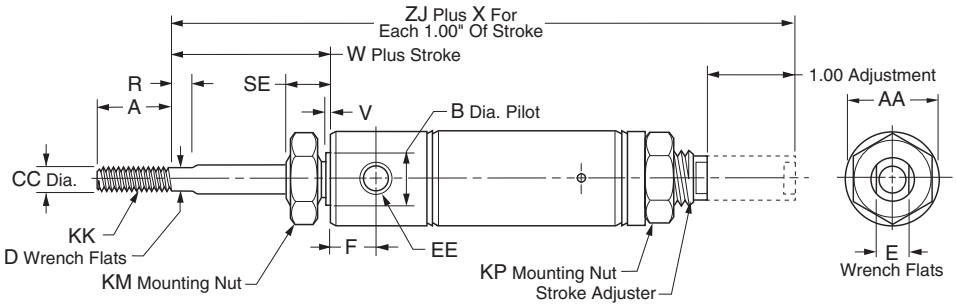

Bore size	SR	SRM	Std. stroke	Max. stroke (in)	SS rod std
3/4"	•		Stroke adjustment in 1" increments to 3": 1" stroke adjusts 0-1" 2" stroke adjusts 1-2" 3" stroke adjusts 2-3"	6	✔
1-1/16"	•			6	✔
1-1/2"	•			6	✔

Bore size	A	AS	AA	B	CC	D	E	EE	F
3/4"	0.50	1.69	0.86	0.624	0.250	–	0.34	1/8 NPTF	–
1-1/16"	0.50	0.32	1.12	0.624	0.312	0.25	0.50	1/8 NPTF	0.56
1-1/2"	1.25	0.19	1.56	0.749	0.437	0.38	0.62	1/8 NPTF	0.62

Bore size	KK	KM	SE	R	V	W	WH	X	ZJ
3/4"	1/4-28 UNF	5/8-18	0.50	–	0.09	0.53	0.97	2.69	3.78
1-1/16"	5/16-24 UNF	5/8-18	0.50	0.12	0.09	0.50	–	2.56	4.03
1-1/2"	7/16-20 UNF	3/4-16	0.62	0.25	0.09	0.88	–	3.00	4.81

Style AP

Pivot mount, spring return, head adjustable stroke

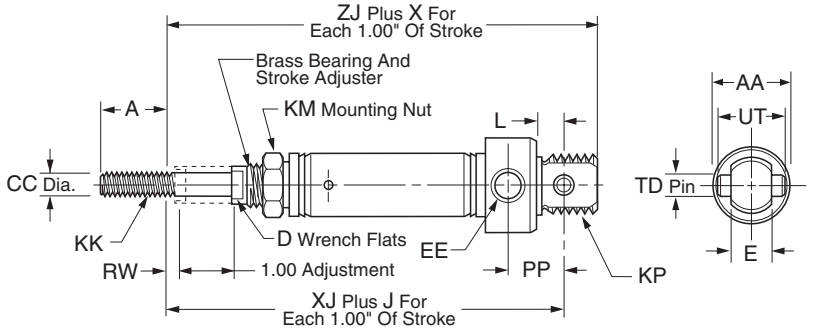

Bore sizes
3/4"

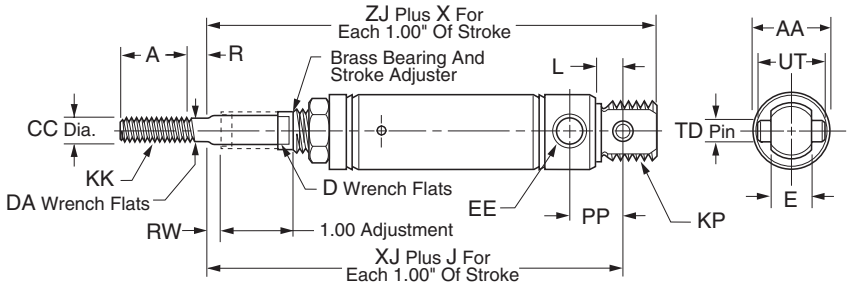

Bore sizes
1-1/16"
1-1/2"

Bore size	SR	SRM	Std. stroke	Max. stroke (in)	SS rod std
3/4"	•		Stroke adjustment in 1" increments to 3": 1" stroke adjusts 0-1" 2" stroke adjusts 1-2" 3" stroke adjusts 2-3"	6	✔
1-1/16"	•			6	✔
1-1/2"	•			6	✔

Bore size	A	AA	CC	D	DA	E	EE	J	KK
3/4"	0.50	0.86	0.250	0.34	–	0.38	1/8 NPTF	1.69	1/4-28 UNF
1-1/16"	0.50	1.12	0.312	0.50	0.25	0.38	1/8 NPTF	1.56	5/16-24 UNF
1-1/2"	0.75	1.56	0.437	0.62	0.38	0.62	1/8 NPTF	2.00	7/16-20 UNF

Bore size	KM	KP	L	OP	PP	R	RW	TD	UT	X	XJ	ZJ
3/4"	7/16-20	5/8-18 UNF	0.34	–	0.62	0.19	0.19	0.250	0.75	1.69	3.65	3.93
1-1/16"	–	5/8-18 UNF	0.34	0.25	0.62	0.12	0.25	0.250	0.75	1.56	3.97	4.25
1-1/2"	3/4-16	–	0.50	–	0.81	0.25	0.25	0.375	1.00	2.00	4.31	4.69

Style BRN

Rear block mount, single acting, spring return

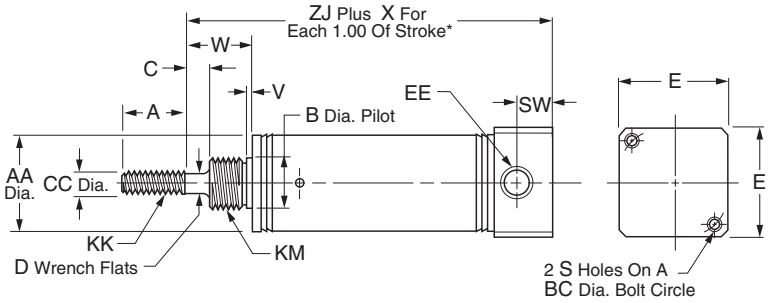

Bore size	SR	SRM	Std. stroke (in)	Max. stroke (in)	SS rod std	A	AA	B	C	CC	D
7/16"	•		1/2, 1, 2, 3, 4	6	✔	0.50	0.5	0.374	–	0.188	–
3/4"	•	•	1, 2, 3, 4	6	✔	0.75	0.81	0.499	0.25	0.250	0.22
1-1/16"	•	•	1, 2, 3, 4	6	✔	0.75	1.12	0.624	0.38	0.312	0.25
1-1/2"	•	•	1, 2, 3, 4	6	✔	1.25	1.56	0.749	0.25	0.437	0.38

Bore size	E	EE	KK	KM	SW	V	W	X	SR ZJ	SRM ZJ
7/16"	0.75	#10-32	#10-32 UNF	3/8-24	0.38	0.05	0.31	0.94	1.62	–
3/4"	1.00	1/8 NPTF	1/4-28 UNF	1/2-20	0.44	0.09	0.62	1.69	2.31	2.56
1-1/16"	1.25	1/8 NPTF	5/16-24 UNF	5/8-18	0.44	0.09	0.88	1.81	2.81	3.06
1-1/2"	1.75	1/4 NPTF	7/16-20 UNF	3/4-16	0.62	0.09	0.88	2.00	3.06	3.31

* To determine lengths for half inch stroke increments, determine length for next highest whole number stroke and subtract one half inch.

Style BRR

Rear block mount, single acting, spring extend

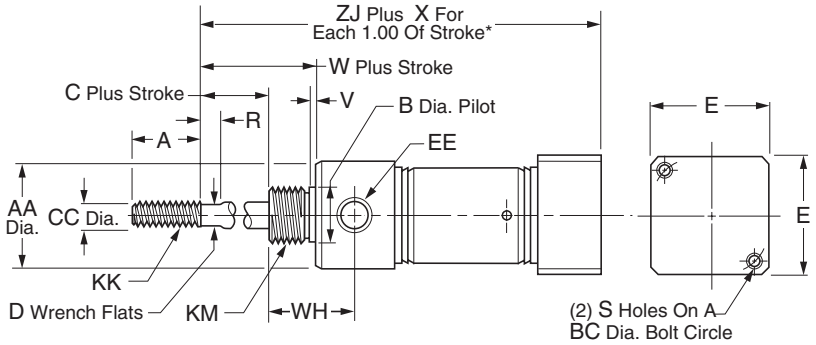

Bore size	SR	SRM	Std. stroke (in)	Max. stroke (in)	SS rod std	A	AA	B	BC	C	CC	D
3/4"	•	•	1, 2, 3, 4	6	✔	0.75	0.86	0.624	1.00	0.25	0.250	0.22
1-1/16"	•	•	1, 2, 3, 4	6	✔	0.75	1.12	0.624	1.25	0.38	0.312	0.25
1-1/2"	•	•	1, 2, 3, 4	6	✔	1.25	1.56	0.749	1.75	0.25	0.437	0.38

Bore size	E	EE	KK	KM	R	S	V	W	WH	X	ZJ SR	ZJ SRM
3/4"	1.00	1/8 NPTF	1/4-28 UNF	5/8-18	0.25	#10-32 UNF	0.09	0.75	0.97	2.69	3.22	3.47
1-1/16"	1.25	1/8 NPTF	5/16-24 UNF	5/8-18	0.25	#10-32 UNF	0.09	0.88	1.06	2.81	3.53	3.78
1-1/2"	1.75	1/4 NPTF	7/16-20 UNF	3/4-16	0.25	1/4-20 UNC	0.09	0.88	1.25	3.00	3.88	4.13

* To determine lengths for half inch stroke increments, determine length for next highest whole number stroke and subtract one half inch.

Style BFD

Front block mount, double acting

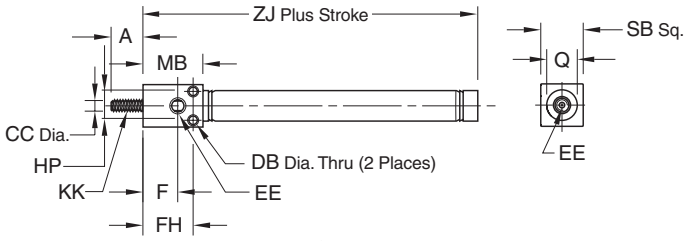

Bore sizes
5/16"

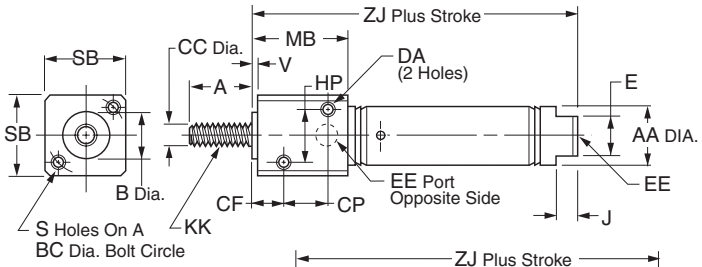

Bore sizes
7/16"

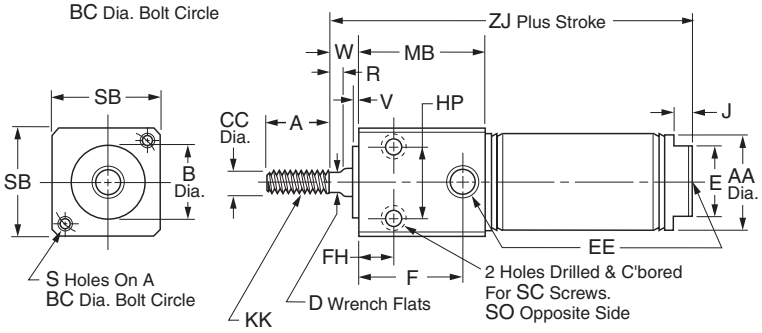

Bore sizes
3/4"
1-1/16"
1-1/2"

Bore size	SR	SRM	Std. stroke (in)	Max. stroke (in)	SS rod std	A	AA	B	BC	CC
5/16"	•		1/2, 1, 1-1/2, 2, 2-1/2, 3, 4	4	✔	0.38	–	–	–	0.125
7/16"	•		1/2, 1, 1-1/2, 2, 3, 4	12	✔	0.50	0.50	0.437	0.75	0.188
3/4"	•	•	1/2, 1, 2, 3, 4, 5, 6	12	✔	0.75	0.81	0.624	1.00	0.250
1-1/16"	•	•	1, 2, 3, 4, 5, 6	12	✔	0.75	1.12	0.750	1.25	0.312
1-1/2"	•	•	1, 2, 3, 4, 5, 6	12	✔	1.25	1.56	1.00	1.75	0.437

Bore size	CF	CP	D	DA	DB	E	EE	F	FH	HP	J
5/16"	–	–	–	–	0.11	–	#10-32	0.41	0.59	0.34	–
7/16"	0.31	0.44	–	#8-32	–	0.38	#10-32	–	0.31	0.44	0.19
3/4"	–	–	0.22	–	–	0.62	1/8 NPTF	0.88	0.38	0.62	0.19
1-1/16"	–	–	0.25	–	–	0.88	1/8 NPTF	1.16	0.62	0.81	0.19
1-1/2"	–	–	0.38	–	–	0.88	1/4 NPTF	1.53	0.88	1.12	0.25

Bore size	KK	MB	Q	R	S	SB	SC	SO	V	W	SR ZJ	SRM ZJ
5/16"	#5-40 UNC	0.71	0.36	–	–	0.50 SQ	–	–	–	–	1.72	–
7/16"	#10-32 UNF	0.88	–	–	#8-32 UNC	0.75	–	–	0.062	–	2.12	–
3/4"	1/4-28 UNF	1.12	–	–	#10-32 UNF	1.00	#10-32	1/4-20 UNC	0.093	0.34	3.22	3.22
1-1/16"	5/16-24 UNF	1.41	–	0.25	#10-32 UNF	1.25	#10-32	1/4-20 UNC	0.093	0.47	3.75	3.91
1-1/2"	7/16-20 UNF	1.88	–	–	1/4-20 UNC	1.75	1/4-20	5/16-18 UNC	0.125	0.38	4.19	4.44

Style BRD

Rear block mount, double acting

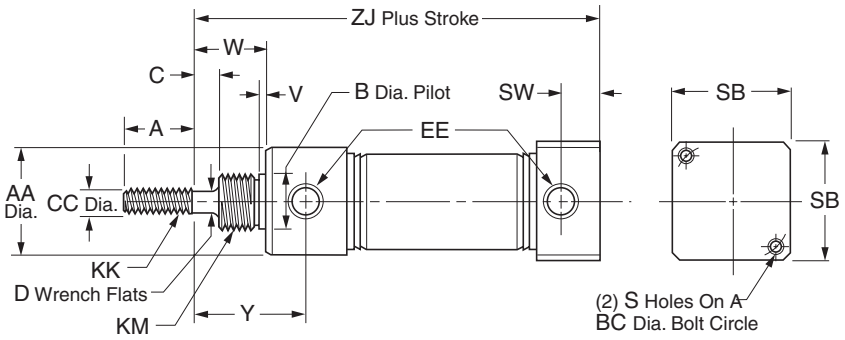

Bore size	SR	SRM	Std. stroke (in)	Max. stroke (in)	SS rod std
7/16"	•		1/2, 1, 2, 3, 4	12	✔
3/4"	•	•	1, 2, 3, 4, 5, 6	12	✔
1-1/16"	•	•	1, 2, 3, 4	12	✔
1-1/2"	•	•	1, 2, 3, 4, 5, 6	12	✔

Bore size	A	AA	B	BC	C	CC	D	EE	KK
7/16"	0.50	0.74	0.437	0.75	–	0.188	–	#10-32	#10-32 UNF
3/4"	0.75	0.86	0.624	1.00	0.25	0.250	0.22	1/8 NPTF	1/4-28 UNF
1-1/16"	0.75	1.12	0.624	1.25	0.38	0.312	0.25	1/8 NPTF	5/16-24 UNF
1-1/2"	1.25	1.56	0.749	1.75	0.25	0.437	0.38	1/4 NPTF	7/16-20 UNF

Bore size	KM	S	SB	SW	V	W	Y	SR ZJ	SRM ZJ
7/16"	7/16-20 UNF	#8-32 UNC	0.75	0.38	0.05	0.43	0.72	2.44	–
3/4"	5/8-18 UNF	#10-32 UNF	1.00	0.44	0.09	0.75	1.22	3.78	3.78
1-1/16"	5/8-18 UNF	#10-32 UNF	1.25	0.44	0.09	0.88	1.44	4.00	4.16
1-1/2"	3/4-16 UNF	1/4-20 UNC	1.75	0.62	0.09	0.88	1.47	4.38	4.63

Style BFN

Front block mount, single acting, spring return

Bore sizes
7/16"

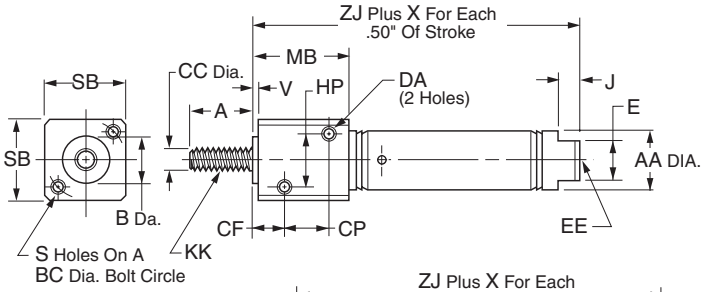

Bore sizes
3/4"
1-1/16"
1-1/2"

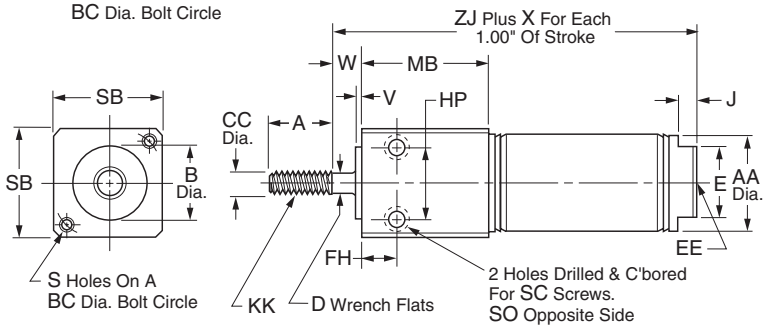

Bore size	SR	SRM	Std. stroke (in)	Max stroke (in)	SS rod std
7/16"	•		1/2, 1, 1-1/2, 2, 3	6	✔
3/4"	•	•	1/2, 1, 2, 3, 4	6	✔
1-1/16"	•	•	1, 2, 3, 4	6	✔
1-1/2"	•	•	1, 2, 3, 4	6	✔

Bore size	A	AA	B	BC	CC	CF	CP	D	DA	E	EE	FH
7/16"	0.50	0.50	0.437	0.75	0.188	0.31	0.44	–	#8-32 UNC	0.38	#10-32	0.31
3/4"	0.75	0.81	0.624	1.00	0.250	–	–	0.22	–	0.62	1/8 NPTF	0.38
1-1/16"	0.75	1.12	0.750	1.25	0.312	–	–	0.25	–	0.88	1/8 NPTF	0.62
1-1/2"	1.25	1.56	1.00	1.75	0.437	–	–	0.38	–	0.88	1/4 NPTF	0.88

Bore size	HP	J	KK	MB	S	SB	SC	SO	V	W	X	SR ZJ	SRM ZJ
7/16"	0.44	0.19	#10-32 UNF	0.88	#8-32 UNC	0.75	–	–	0.062	–	0.94	1.94	–
3/4"	0.62	0.19	1/4-28 UNF	1.12	#10-32 UNF	1.00	#10-32	1/4-20 UNC	0.093	0.34	1.69	2.66	2.91
1-1/16"	0.81	0.19	5/16-24 UNF	1.41	#10-32 UNF	1.25	#10-32	1/4-20 UNC	0.093	0.47	1.81	3.38	3.63
1-1/2"	1.12	0.25	7/16-20 UNF	1.88	1/4 UNC	1.75	1/4-20	5/16-18 UNC	0.125	0.38	2.00	3.69	3.94

* To determine lengths for half inch stroke increments, determine length for next highest whole number stroke and subtract one half inch.

Style BFR

Front block mount, single acting, spring extend

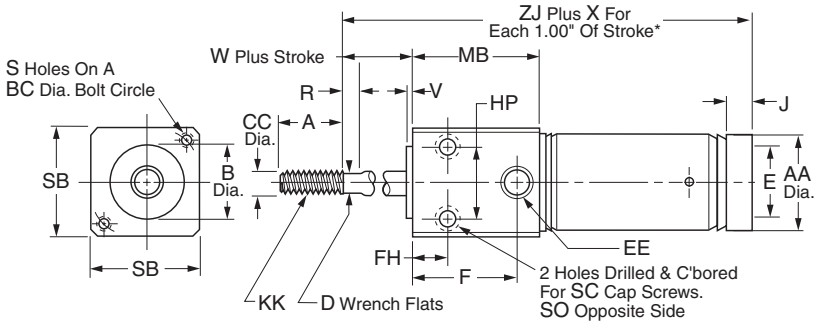

Bore size	SR	SRM	Std. stroke (in)	Max stroke (in)	SS rod std
3/4"	•	•	1, 2, 3, 4	6	✔
1-1/16"	•	•	1, 2, 3, 4	6	✔
1-1/2"	•	•	1, 2, 3, 4	6	✔

Bore size	A	AA	B	BC	CC	D	E	EE	F	FH	HP	J
3/4"	0.75	0.81	0.624	1.00	0.250	0.22	–	1/8 NPTF	0.88	0.38	0.62	0.19
1-1/16"	0.75	1.12	0.750	1.25	0.312	0.25	–	1/8 NPTF	1.16	0.62	0.81	–
1-1/2"	1.25	1.56	1.00	1.75	0.437	0.38	0.88	1/4 NPTF	1.53	0.88	1.12	0.25

Bore size	KK	MB	R	S	SB	SC	SO	V	W	X	SR ZJ	SRM ZJ
3/4"	1/4-28 UNF	1.12	0.25	#10-32 UNF	1.00	#10-32	1/4-20 UNC	0.093	0.34	2.69	2.56	2.81
1-1/16"	5/16-24 UNF	1.41	0.25	#10-32 UNF	1.25	#10-32	1/4-20 UNC	0.093	0.47	2.81	3.12	3.37
1-1/2"	7/16-20 UNF	1.88	0.25	1/4-20 UNC	1.75	1/4-20	5/16-18 UNC	0.125	0.38	3.00	3.69	3.94

* To determine lengths for half inch stroke increments, determine length for next highest whole number stroke and subtract one half inch.

Style TRN

Rear trunnion mount, single acting, spring return

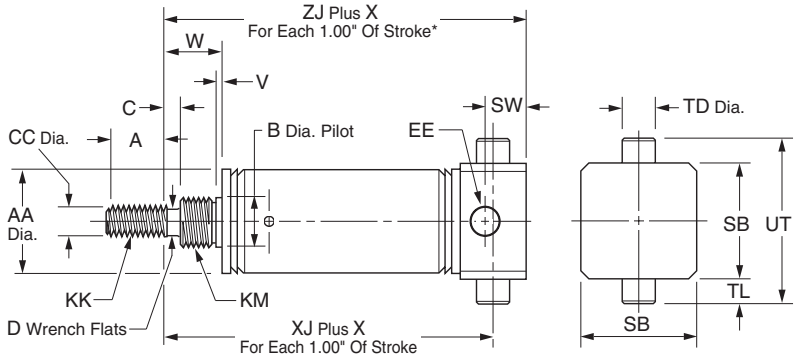

Bore size	SR	SRM	Std. stroke (in)	Max. stroke (in)	SS rod std	A	AA	B	C	CC	D	EE
7/16"	•		1/2, 1, 2, 3, 4	6	✔	0.50	0.50	0.374	–	0.188	–	#10-32
3/4"	•	•	1, 2, 3, 4	6	✔	0.75	0.81	0.499	0.25	0.250	0.22	1/8 NPTF
1-1/16"	•	•	1, 2, 3, 4	6	✔	0.75	1.12	0.624	0.38	0.312	0.25	1/8 NPTF
1-1/2"	•	•	1, 2, 3, 4	6	✔	1.25	1.56	0.749	0.25	0.437	0.38	1/4 NPTF

Bore size	KK	KM	SB	SW	TD	TL	UT	V	W	X	SR XJ	SRM XJ	SR ZJ	SRM ZJ
7/16"	#10-32 UNF	3/8-24 UNF	0.75	0.38	0.374	0.50	1.25	0.05	0.32	0.94**	1.38	–	1.62	–
3/4"	1/4-28 UNF	1/2-20 UNF	1.00	0.44	0.500	0.38	1.75	0.09	0.62	1.69	1.94	2.19	2.31	2.56
1-1/16"	5/16-24 UNF	5/8-18 UNF	1.25	0.44	0.500	0.38	2.00	0.09	0.88	1.81	2.44	2.69	2.81	3.06
1-1/2"	7/16-20 UNF	3/4-16 UNF	1.75	0.62	0.500	0.38	2.50	0.09	0.88	2.00	2.56	2.81	3.06	3.31

* To determine lengths for half inch stroke increments, determine length for next highest whole number stroke and subtract one half inch.
** For each 0.50" of stroke.

Style TRR

Rear trunnion mount, single acting, spring extend

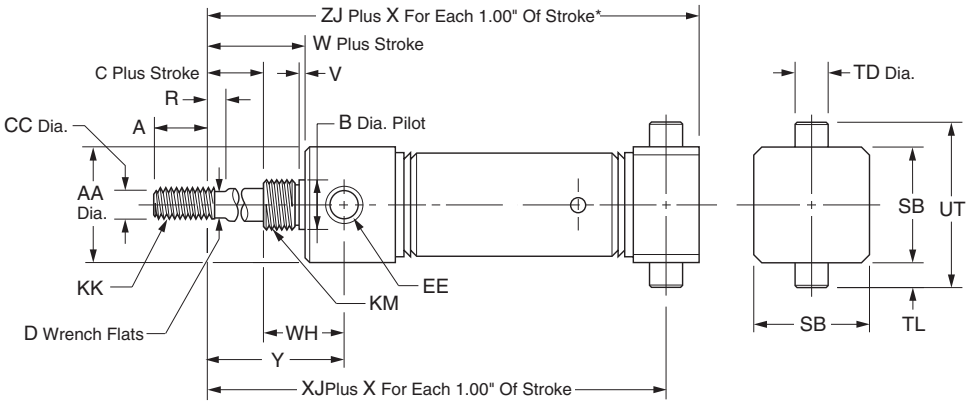

Bore size	SR	SRM	Std. stroke (in)	Max. stroke (in)	SS rod std	A	AA	B	C	CC	D	EE
3/4"	•	•	1, 2, 3, 4	6	3	0.75	0.86	0.624	0.25	0.250	0.22	1/8 NPTF
1-1/16"	•	•	1, 2, 3, 4	6	3	0.75	1.12	0.624	0.38	0.312	0.25	1/8 NPTF
1-1/2"	•	•	1, 2, 3, 4	6	3	1.25	1.56	0.749	0.25	0.437	0.38	1/4 NPTF

Bore size	KK	KM	R	SB	TD	TL	UT	V	W	WH	X	SR XJ	SRM XJ	SR ZJ	SRM ZJ
3/4"	1/4-28 UNF	1/2-20 UNF	0.25	1.00	0.500	0.38	1.75	0.09	0.75	0.72	2.69	2.85	3.10	3.22	3.47
1-1/16"	5/16-24 UNF	5/8-18 UNF	0.25	1.25	0.500	0.38	2.00	0.09	0.88	0.68	2.81	3.15	3.40	3.53	3.78
1-1/2"	7/16-20 UNF	3/4-16 UNF	0.25	1.75	0.500	0.38	2.50	0.09	0.88	1.25	3.00	3.38	3.63	3.88	4.13

* To determine lengths for half inch stroke increments, determine length for next highest whole number stroke and subtract one half inch.

Style TFD

Front trunnion mount, double acting

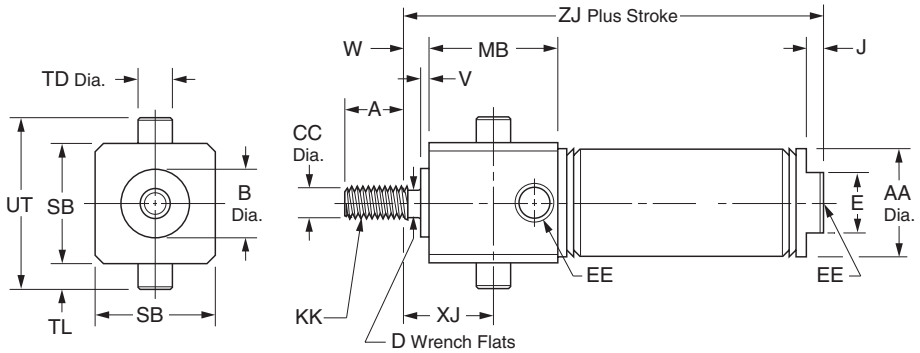

Bore size	SR	SRM	Std. stroke (in)	Max. stroke (in)	SS rod std	A	AA	B	CC	D	E	EE
7/16"	•		1/2, 1, 1-1/2, 2, 3, 4	12	✔	0.50	0.50	0.437	0.188	–	0.38	#10-32
3/4"	•	•	1, 2, 3, 4, 5, 6	12	✔	0.75	0.81	0.624	0.250	0.22	0.62	1/8 NPTF
1-1/16"	•	•	1, 2, 3, 4, 5, 6	12	✔	0.75	1.12	0.750	0.312	0.25	0.88	1/8 NPTF
1-1/2"	•	•	1, 2, 3, 4, 5, 6	12	✔	1.25	1.56	1.000	0.437	0.38	0.88	1/4 NPTF

Bore size	J	KK	MB	SB	TD	TL	UT	V	W	XJ	SR ZJ	SRM ZJ
7/16"	0.19	#10-32 UNF	0.88	0.75	0.374	0.250	1.25	0.062	–	0.31	2.12	–
3/4"	0.19	1/4-28 UNF	1.12	1.00	0.500	0.38	1.75	0.093	0.34	0.69	3.22	3.22
1-1/16"	0.19	5/16-24 UNF	1.41	1.25	0.500	0.38	2.00	0.093	0.47	1.09	3.75	3.91
1-1/2"	0.25	7/16-20 UNF	1.88	1.75	0.500	0.38	2.50	0.125	0.38	1.31	4.19	4.44

Style TRD

Rear trunnion mount, double acting

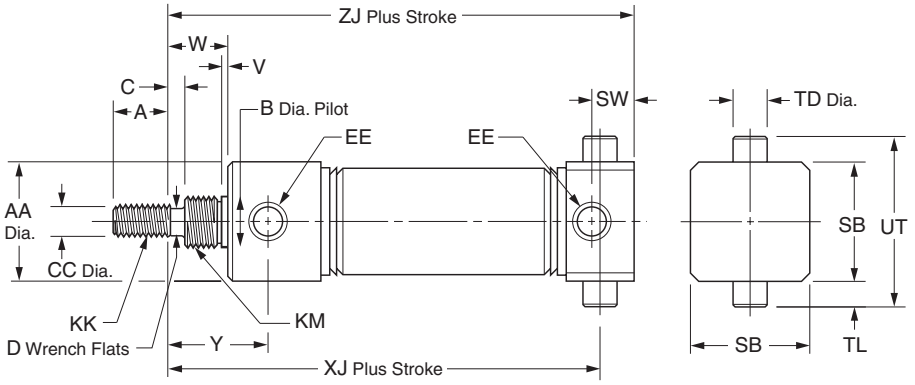

Bore size	SR	SRM	Std. stroke (in)	Max. stroke (in)	SS rod std	A	AA	B	C	CC	D	EE
7/16"	•		1/2, 1, 1-1/2, 2, 3, 4	12	✔	0.50	0.74	0.437	–	0.188	–	#10-32
3/4"	•	•	1, 2, 3, 4, 5, 6	12	✔	0.75	0.86	0.624	0.25	0.250	0.22	1/8 NPTF
1-1/16"	•	•	1, 2, 3, 4	12	✔	0.75	1.12	0.624	0.38	0.312	0.25	1/8 NPTF
1-1/2"	•	•	1, 2, 3, 4, 5, 6	12	✔	1.25	1.56	0.749	0.25	0.437	0.38	1/4 NPTF

Bore size	KK #10-32 UNF	KM 7/16-20 UNF	SB	SW	TD	TL	UT	V	W	SR XJ	SRM XJ	Y	SR ZJ	SRM ZJ
7/16"	1/4-28 UNF	5/8-18 UNF	0.75	0.38	0.374	0.25	1.25	0.05	0.38	2.19	–	0.72	2.44	–
3/4"	5/16-24 UNF	5/8-18 UNF	1.00	0.44	0.500	0.38	1.75	0.09	0.75	3.41	3.41	1.22	3.78	3.78
1-1/16"	7/16-20 UNF	3/4-16 UNF	1.25	0.44	0.500	0.38	2.00	0.09	0.88	3.62	3.62	1.44	4.00	4.16
1-1/2"			1.75	0.62	0.500	0.38	2.50	0.09	0.88	3.88	4.13	1.47	4.38	4.63

Style TFN

Front trunnion mount, single acting, spring return

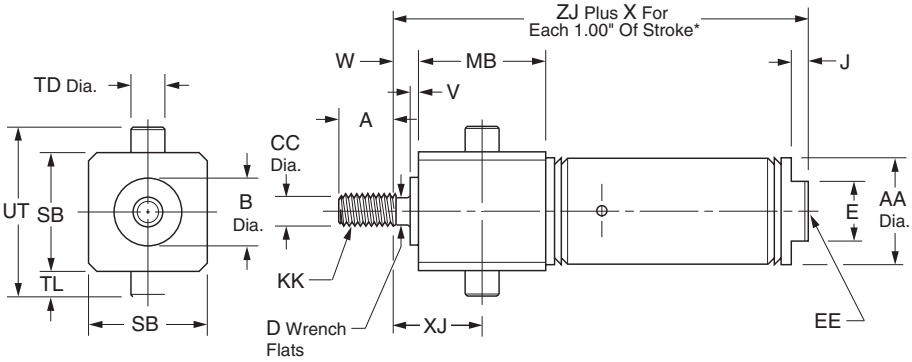

Bore size	SR	SRM	Std. stroke (in)	Max. stroke (in)	SS rod std	A	AA	B	CC	D	E	EE
7/16"	•		1/2, 1, 1-1/2, 2, 3	6	✔	0.50	0.50	0.437	0.188	–	0.38	#10-32
3/4"	•	•	1/2, 1, 2, 3, 4	6	✔	0.75	0.81	0.624	0.250	0.22	0.62	1/8 NPTF
1-1/16"	•	•	1, 2, 3, 4	6	✔	0.75	1.12	0.750	0.312	0.25	0.88	1/8 NPTF
1-1/2"	•	•	1, 2, 3, 4	6	✔	1.25	1.56	1.000	0.437	0.38	0.88	1/4 NPTF

Bore size	J 0.19	KK #10-32 UNF	MB	SB	TD	TL	UT	V	W	X	XJ	SR ZJ	SRM ZJ
7/16"	0.19	1/4-28 UNF	0.88	0.75	0.374	0.25	1.25	0.062	0	0.94**	0.31	1.94	–
3/4"	0.19	5/16-24 UNF	1.12	1.00	0.500	0.38	1.75	0.093	0.34	1.69	0.69	2.66	2.91
1-1/16"	0.25	7/16-20 UNF	1.41	1.25	0.500	0.38	2.00	0.093	0.47	1.81	1.09	3.38	3.63
1-1/2"			1.88	1.75	0.500	0.38	2.50	0.125	0.38	2.00	1.31	3.69	3.94

* To determine lengths for half inch stroke increments, determine length for next highest whole number stroke and subtract one half inch.
** For each 0.50" of stroke

Mounting Style TFR

Front trunnion mount, single acting, spring extend

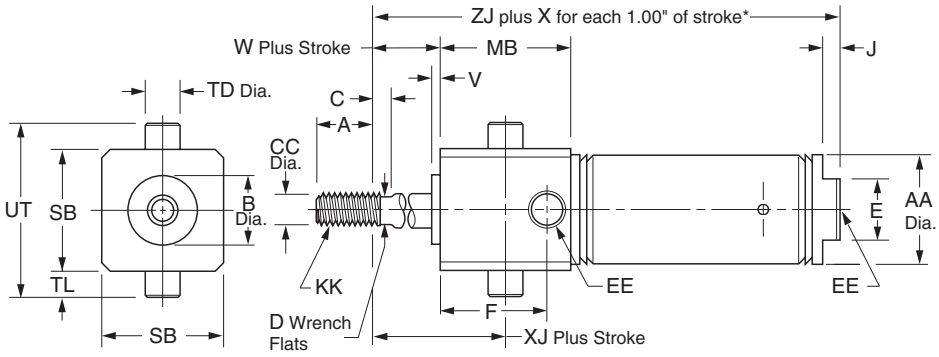

Bore size	SR	SRM	Std. stroke (in)	Max. stroke (in)	SS rod std	A	AA	B	C	CC	D	E
3/4"	•	•	1, 2, 3, 4	6	✔	0.75	0.81	0.624	0.25	0.250	0.22	0
1-1/16"	•	•	1, 2, 3, 4	6	✔	0.75	1.12	0.750	0.25	0.312	0.25	0
1-1/2"	•	•	1, 2, 3, 4	6	✔	1.25	1.56	1.000	0.25	0.437	0.38	0.88

Bore size	F	EE	J	KK	MB	SB	TD	TL	UT	V	W	X	XJ	SR ZJ	SRM ZJ
3/4"	0.88	1/8 NPTF	–	1/4-28 UNF	1.12	1.00	0.500	0.38	1.75	0.093	0.34	2.69	0.69	2.56	2.81
1-1/16"	1.16	1/8 NPTF	–	5/16-24 UNF	1.41	1.25	0.500	0.38	2.00	0.093	0.47	2.81	1.09	3.12	3.37
1-1/2"	–	1/4 NPTF	0.25	7/16-20 UNF	1.88	1.75	0.500	0.38	2.50	0.125	0.38	3.00	1.31	3.69	3.94

* To determine lengths for half inch stroke increments, determine length for next highest whole number stroke and subtract one half inch.

Air Reservoirs

Air Reservoirs installed can significantly reduce the pulsation of a system. In addition air reservoirs can be used as a means to store energy. Caution should always be used when storing energy. Air reservoirs if installed in the correct location and sized correctly can temporarily increase the flow of an actuator or cylinder.

As always never exceed the rated pressure of the cylinder.

Ordering information

.75	AR	SR	2.00

Bore Size*

.75	3/4"
1.06	1-1/16"
1.50	1-1/2"
2.00	2"
2.50	2-1/2"
3.00	3"

Mounting

AR	Air Reservoir

Length

Specify in inches.
See table below.

Bore size	Standard lengths	Max. length	Volume (in³)
3/4"	1" increments to 4"	32"	0.39 plus 0.44 per inch length
1-1/16"	1" increments to 8"	32"	0.99 plus 0.89 per inch length
1-1/2"	1" increments to 16"	32"	1.91 plus 1.77 per inch length
2"	1" increments to 16"	32"	4.22 plus 3.14 per inch length
2-1/2"	1" increments to 16"	32"	7.04 plus 4.91 per inch length
3"	1" increments to 16"	32"	9.90 plus 7.07 per inch length

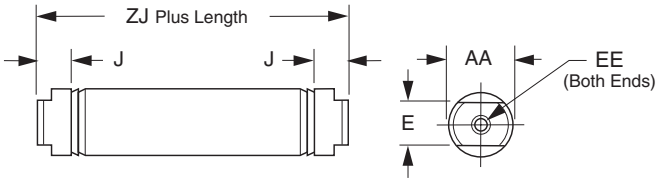

Bore size	AA	E	EE	J	ZJ
3/4"	0.813	0.625	1/8" NPTF	0.19	1.938
1-1/16"	1.125	0.88	1/8" NPTF	0.19	2.375
1-1/2"	1.56	0.88	1/8" NPTF	0.250	2.250
2"	2.08	1.25	1/4" NPTF	0.562	2.875
2-1/2"	2.62	1.75	1/4" NPTF	0.562	2.875
3"	3.16	2.00	3/8" NPTF	0.562	3.190

Bumpers

Bumpers are available at extra cost except where noted as standard. Add the following dimensions to the overall cylinder length by bore.

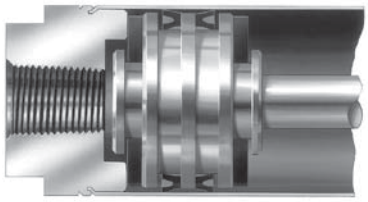

SR Bumper Adder

	SR Series Bore Size											
Cylinder Type	5/16"	7/16"	9/16"	3/4"	7/8"	1-1/16"	1-1/4"	1-1/2"	1-3/4"	2"	2-1/2"	3"
Spring Return	*	0.062"	0.062"	0.125"	*	0.125"	*	**	*	0.125"	N/A	N/A
Spring Extend	*	0.125"	0.062"	0.125"	*	0.125"	*	**	*	0.125"	N/A	N/A
Double Acting	*	0.188"	0.125"	**	*	0.125"	*	0.125"	*	0.250"	0.250"	N/A
K-type	N/A	0.250"	0.125"	**	*	0.500"	*	0.125"	*	0.250"	0.250"	N/A

* Bumpers are furnished as standard and do not affect overall length.
** Bumpers do not affect overall length.

SRM Bumper Adder

	SRM Series Bore Size							
Cylinder Type	9/16"	3/4"	1-1/16"	1-1/4"	1-1/2"	1-3/4"	2"	2-1/2"
Spring Return	0.062"	0.125"	0.125"	0.125"	0.125"	*	0.125"	N/A
Spring Extend	0.062"	0.125"	0.125"	0.125"	0.125"	*	0.125"	N/A
Double Acting	0.125"	0.250"	0.250"	0.250"	0.250"	*	0.250"	0.250"
K-type	0.125"	0.312"	0.250"	0.250"	0.250"	*	0.250"	0.250"

Fluorocarbon Seals

Available on all bore sizes at extra cost. Not available on SRM or SRDM series.

Stainless Steel Piston Rods

Corrosion resistant stainless steel is the standard piston rod material for all bore sizes up to and including 1-1/2 inch bore at no additional cost. The only exception to the stainless steel standard is when a hollow rod, KDXH option is specified. Stainless steel is also the standard material on block, trunnion, hex/non-rotating and KDX mounts. Stainless steel is available on other sizes for an additional charge.

Rod Wiper

SR/SRM Series cylinders can be fitted with a rod wiper that is specially designed to prevent contaminants from clinging to the piston rod and damaging the piston rod seal. Available in 3/4", 1-1/16", and 1-1/2" bores, the piston rod wiper can be added to the SR/SRM and SRD/SRDM series.

Adjustable Cushion Option

Cushions can be selected on nine bore sizes, ranging from 0.75" bore to 3.0" bore with mounting styles D, front nose mount, and DXP, rear pivot mount. Adjustable cushions are not available with double rod SR Series cylinders.

Cushion Adjusting Needle Valves

The fine-thread cushion needle valves make precise adjustment quick and easy. The needle valve is fully captured to allow for safe cushion adjustment while cylinder is pressurized. The brass needle valves are corrosion resistant. The standard position for needle valve adjustments is position 1, 90° from the port. See port location table for SR Series Cylinders.

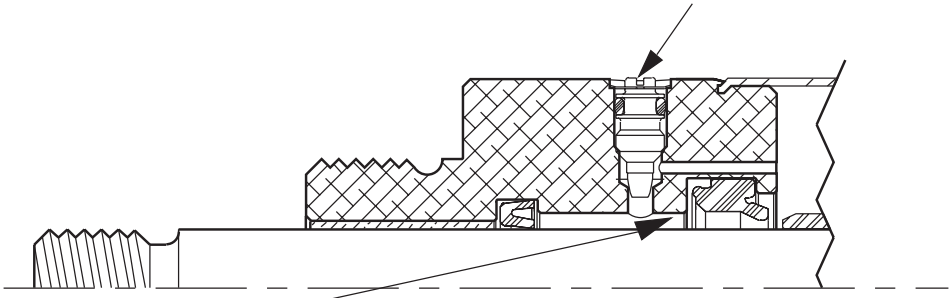

Check Seal Cushion

The "Check Seal" system offers excellent cushioning efficiency and long cushion seal life. This seal is specifically designed for cushion applications and has a long proven history in our products. Extensive side by side testing of the check seal in SR Series cylinders significantly outlasted and outperformed competitors' o-ring shaped seals.

The Check Seal's unique geometry exhibits the dynamic sealing capabilities of a lipseal. As the cushion sleeve enters the Check Seal at the end of stroke, the Check Seal blocks the air from exhausting directly through the port and forces the air through the adjustable needle valve orifice. The exhaust airflow is precisely metered to control the desired rate of deceleration of the cylinder piston.

During stroke reversal, the check valve action of the Check Seal induces a fast out-of-cushion response. The Check Seal floats forward in the retainer groove as the cushion sleeve exits the Cushion Seal, thereby creating a path for maximum air flow around the Check Seal to access the piston face. The quick response of the Check Seal design yields faster cycle times and increased productivity.

Critical Mounting Dimensions for SR Series and SRM Cylinders with Adjustable Cushions

In most cases, cylinder mounting dimensions are not affected when cushions are specified. Standard catalog dimensions apply when cushions are specified at either end of a DXP mount and when specified at the head end only of a D mount. **The only exception to standard catalog dimensions is when a cushion is specified on the cap end or both ends of a D mount.** Please consult Table A for the critical mounting dimensions on D mount SR and SRM cylinders with cushions both ends or cushions cap end only.

Table B shows the cushion lengths for SR and SRM cylinders.

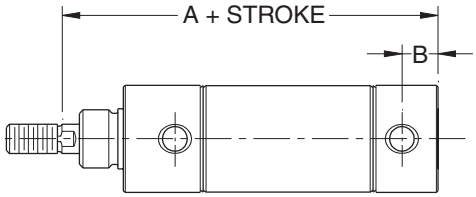

D Mount

Table A:
Critical Mounting Dimensions for D Mount SR and SRM Cylinders with Cushions Both Ends or Cushions Cap End Only.

Bore size	SR Dimensions A + Stroke	SR Dimensions B	SRM Dimensions A + Stroke	SRM Dimensions B
.75	3.40	0.28	3.40	0.28
.88	3.25	0.28	N/A	N/A
1.06	3.49	0.28	3.65	0.28
1.25	4.31	0.38	4.34	0.38
1.50	4.12	0.31	4.37	0.31
1.75	5.25	0.42	5.25	0.42
2.00	5.06	0.47	5.34	0.47
2.50	5.06	0.47	5.06	0.47
3.00	5.69	0.53	N/A	N/A

Table B:
Cushion Lengths for SR and SRM Cylinders.

Bore size	Head	Cap
.75	0.750	0.625
.88	0.750	0.625
1.06	0.750	06.25
1.25	0.750	0.625
1.50	0.750	0.625
1.75	0.875	0.625
2.00	0.875	0.750
2.50	0.875	0.750
3.00	0.875	1.000

Piston Rod Clevis

Assembly includes pin and (2) retainer rings and (1) jam nut.

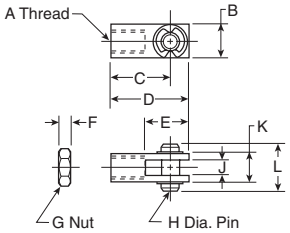

Bore size	A	B	C	D	E	F	G	H	J	K	L	Part number
5/16	#5-40	.31	.44	.56	.38	.11	#5-40	.12	.13	.31	.50	L071300025
7/16, 9/16	#10-32	.38	.75	.94	.56	.12	#10-32	.19	.19	.38	.56	L071300100 L077130100*
3/4, 7/8	1/4-28	.50	.94	1.19	.68	.16	1/4-28	.25	.25	.50	.69	L071300200 L077130200*
1-1/16	5/16-24	.50	.94	1.19	.68	.19	5/16-24	.25	.25	.50	.69	L071300300 L077130300*
1-1/4, 1-1/2	7/16-20	.75	1.31	1.69	.94	.25	7/16-20	.38	.38	.75	1.03	L071300400 L077130400*
1-3/4, 2, 2-1/2	1/2-20	.75	1.31	1.69	.94	.31	1/2-20	.38	.38	.75	1.03	L071300500 L077130500*
3	5/8-18	1.00	2.25	2.75	1.50	.38	5/8-18	.50	.50	1.00	1.38	L071300600

* Stainless Steel for use with SRD/SRDM cylinders.

Pivot Brackets

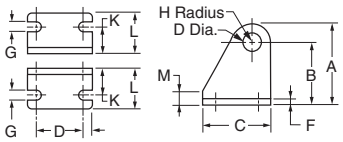

Bore size	A	B	C	D	E	F	G	H	J	K	L	M	Part number
7/16	.76	.56	.75	.50	.12	.06	.19	.20	.160	.28	.50	.12	L071310100
3/4, 7/8, 1-1/16	1.19	.88	1.12	.75	.19	.12	.27	.31	.255	.44	.81	.25	L071310200
1-1/2	1.75	1.38	1.50	1.00	.25	.12	.27	.38	.380	.62	1.00	.25	L071310300

Pivot Bracket Assembly

Assembly includes pin and (2) retainer rings.

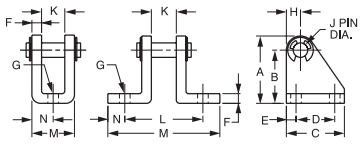

5/16" bore only

Bore size	A	B	C	D	E	F	G	H	J	K	L	M	N	Part number
5/16	.53	.40	.62	.38	.12	.04	16	.12	.12	.26	–	.36	.18	L071320025
7/16, 9/16	.76	.56	.75	.50	.12	.06	.19	.19	.156	.34	.91	1.34	.22	L071320100 L077150100*
3/4, 7/8, 1-1/16	1.18	.88	1.12	.75	.19	.12	.27	.30	.250	.38	1.25	2.00	.38	L071320200 L077150200*
1-1/4	1.18	.88	1.12	.75	.19	.12	27	.30	.250	.50	1.38	2.14	.38	L071320300
1-1/2, 1-3/4	1.75	1.38	1.50	1.00	.25	.25	.27	.37	.375	.62	2.00	2.88	.44	L071320400 L077150400*
2, 2-1/2	1.75	1.38	1.50	1.00	.25	.25	.27	.37	.375	.75	2.12	3.00	.44	L071320500 L077150500*
3	2.25	1.75	1.75	1.25	.25	.25	.27	50	.50	.88	2.62	3.88	.62	L071320600

* Stainless steel for use with SRD/SRDM cylinders.

SR Series Trunnion Brackets

Select brackets for SR series trunnion mount cylinders from the table below. (Note: trunnion brackets are ordered as a separate item from the cylinder.)

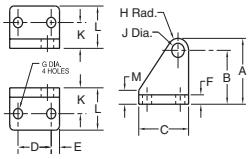

Bore size	A	B	C	D	E	F	G	H	J	K	L	M	Part number
7/16	1.75	1.38	1.50	1	.25	.25	.27	.38	.375	.69	1.12	.37	L076600100
3/4, 1-1/16, 1-1/2	1.75	1.38	1.50	1	.25	.25	.27	.38	.500	.69	1.12	.37	L076600200

Most popular.

Foot Brackets

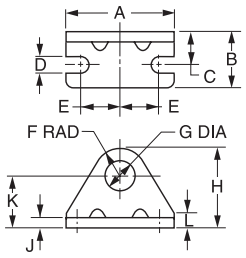

Bore size	A	B	C	D	E	F	G	H	J	K	L	Part number
5/16	1.00	.37	.25	.13	.37	.31	.25	.75	.06	.44	.12	L073790016
5/16	1.00	.37	.25	.13	.37	.31	.38	.75	.06	.44	.12	L073790023
7/16	1.38	.62	.31	.19	.50	.31	.38	.88	.07	.56	.12	L073790024
7/16, 9/16	1.38	.62	.38	.19	.50	.38	.44	.94	.09	.56	.12	L073790028 L077160028*
3/4	1.62	.75	.44	.19	.62	.41	.50	1.09	.10	.69	.19	L073790032
3/4, 7/8, 1-1/16	1.88	1.00	.56	.27	.75	.56	.63	1.38	.12	.81	.25	L073790040 L077160040*
1-1/4, 1-1/2	2.50	1.50	.75	.27	.94	.75	.75	1.75	.12	1.00	.38	L073790048 L077160048*
1-3/4	3.00	1.50	.87	.35	1.12	.91	1.03	2.16	.19	1.25	.50	L073790102
2	3.12	1.62	1.00	.34	1.12	1.00	1.38	2.50	.25	1.50	.62	L073790124 L077160124*
2-1/2	3.75	1.62	1.00	.35	1.44	1.25	1.51	3.00	.25	1.75	.75	L073790132
3	4.37	1.62	1.00	.35	1.75	1.25	1.64	3.14	.25	1.89	.89	L073790140

* Stainless Steel for use with SRD/SRDM cylinders.

Mounting Nut

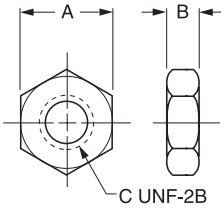

Bore size	A	B	C	Part number
5/16	.44	.16	1/4-28	L073800200
5/16, 7/16	.56	.22	3/8-24	L073800400
7/16, 9/16	.69	.25	7/16-20	L073800500 L077170500*
3/4	.75	.31	1/2-20	L073800600
3/4, 7/8, 1-1/16	.94	.38	5/8-18	L073800800 L077170800*
1-1/4, 1-1/2	1.12	.42	3/4-16	L073800900
1-1/4, 1-1/2	1.12	.72	3/4-16	L077170900*
1-3/4	1.50	.55	1-14	L073801100
2	1.88	.50	1-1/4-12	L073801200 L077171200*
2-1/2	2.06	.78	1-3/8-12	L073801400
3	2.25	.84	1-1/2-12	L073801500

* Stainless Steel for use with SRD/SRDM cylinders.

Most popular.

SRG & SRGM Series

- 304 stainless steel cylinder body, non repairable construction
- 303 Stainless steel heads and caps
- 303 Stainless steel piston rod standard on all bore sizes
- Urethane rod wiper standard
- Available with bumpers and magnetic pistons
- Double acting models only
- Available with Nose, Foot and Pivot Mounts
- Corrosion resistant, reinforced plastic pivot bushing

Operating information

Operating pressure:	250 PSIG (17 bar) for SRG and SRGM
Temperature range:	-10°F to 165°F (-23°C to 74°C) for SRG 14°F to 140°F (-10°C to 60°C) for SRGM
Filtration requirements:	40 micron, dry filtered air

Ordering information

1.06 **D** **SRG** **B** **V** [ ] **Y** [ ] **2.00**

Bore Size	
.75	3/4"
1.06	1-1/16"
1.50	1-1/2"
2.00	2"
2.50	2-1/2"

Mounting
D, DXP

Series	
SRG	Stainless caps
SRGM	Stainless caps and magnetic piston

Piston	
Blank	No bumpers
B	With bumpers

Seals	
Blank	Standard seals
V	Fluorocarbon seals*

Urethane rod wiper is standard

* Fluorocarbon seals not available on SRGM series.

Special
Use "**S**" only if special modifications are required, except piston rod end.

Non-Standard Rod	
Y	Stainless steel piston rod 303 stainless steel is standard on all bore sizes

Non-Standard Piston Rod
Use "**3**" only when special piston rod end is required. Specify CC, LE and A Dimensions. (See below.)

Stroke
Specify in inches

Non-Standard Rods

For non-standard rod dimensions, or undersized rod end threads, put a "3" in model number and describe the rod using the letters shown in the drawing. Specify CC, LE and A dimensions. LE is measured in retracted position.

Full diameter rod end threads

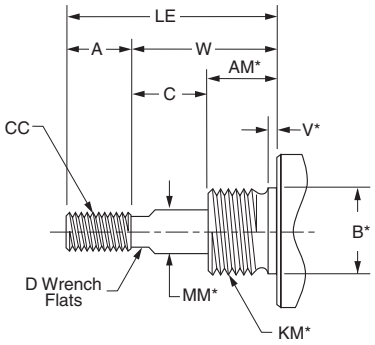

Undersized rod end threads

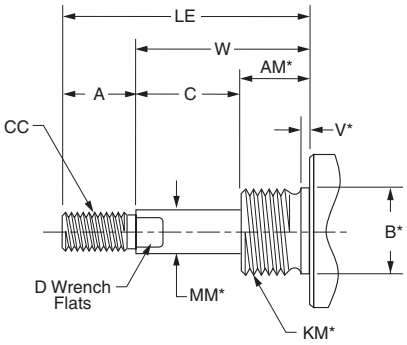

* Requires an S designation in model number.

Mounting Style D

Nose mount, double acting

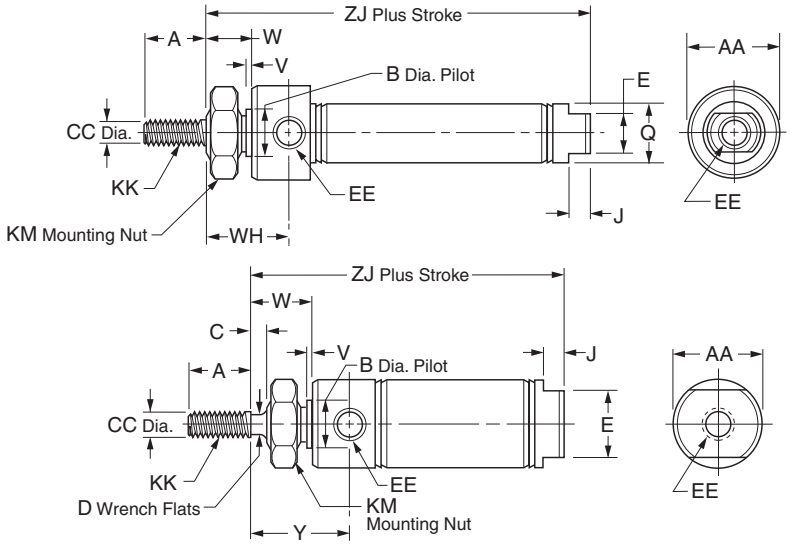

Bore sizes †
3/4" *

Bore sizes †
1-1/16" *
1-1/2" *
2" *
2-1/2" *

* No mounting nuts

† Mounting nuts sold seperately for all series SRG

Bore size	Std. stroke (in)	Max. stroke (in)	SS rod std	A	AA	B	C	CC	D
3/4"	1/2, 1, 2, 2-1/2, 3, 4, 5, 6, 8, 10	12	✔	0.50	0.86	0.624	–	0.250	–
1-1/16"	1/2, 1, 1-1/2, 2, 2-1/2, 3, 4, 5, 6, 8, 10, 12	12	✔	0.50	1.12	0.624	0.12	0.312	0.25
1-1/2"	1/2, 1, 2, 3, 4, 5, 6, 8, 10, 12	12	✔	0.75	1.56	0.749	0.25	0.437	0.38
2"	–	12	✔	0.88	2.08	1.374	0.38	0.625	0.50
2-1/2"	–	12	✔	0.88	2.62	1.500	0.38	0.625	1/2

Bore size	E	EE	J	KK	KM	Q	V	W	WH	Y	ZJ SRG	ZJ SRGM
3/4"	0.62	1/8 NPTF	0.19	1/4-28 UNF	5/8-18	0.81	0.09	0.50	0.97	–	2.97	2.97
1-1/16"	0.88	1/8 NPTF	0.19	5/16-24 UNF	5/8-18	–	0.09	0.62	–	1.19	3.25	3.41
1-1/2"	0.88	1/8 NPTF	0.25	7/16-20 UNF	3/4-16	–	0.09	0.88	–	1.50	3.69	3.94
2"	1.25	1/4 NPTF	0.31	1/2-20 UNF	1-1/4-12	–	0.12	1.19	–	1.84	4.69	4.97
2-1/2"	1.75	1/4 NPTF	0.31	1/2-20 UNF	1-3/8-12	–	0.13	1.19	–	1.84	4.69	4.69

† Mounting nuts sold seperately for all series SRG

Style DXP

Pivot & nose mount, double acting, no pivot pin

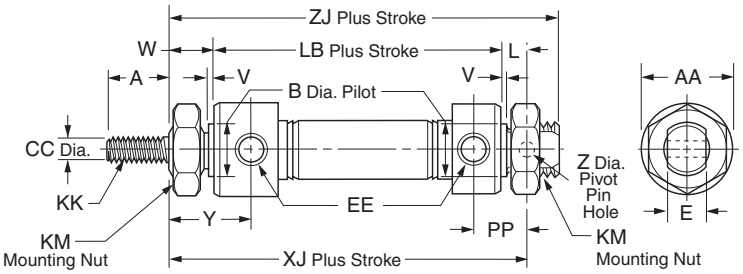

Bore sizes †
3/4" *

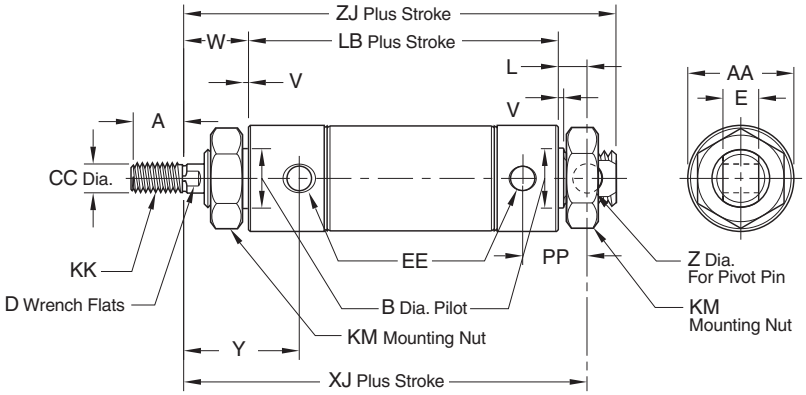

Bore sizes †
1-1/16" *
1-1/2" *
2" *
2-1/2" *

* No mounting nuts

† Mounting nuts sold seperately for all series SRG

Bore size	Std. stroke (in)	Max. stroke (in)	SS rod std	A	AA	B	CC	D	E	EE
3/4"	1, 2, 3, 4, 5, 6, 8, 10	32	✔	0.50	0.86	0.624	0.250	–	0.38	1/8 NPTF
1-1/16"	1/2, 1, 1-1/2, 2, 2-1/2, 3, 4, 5, 6, 8, 10, 12	32	✔	0.50	1.12	0.624	0.312	0.25	0.38	1/8 NPTF
1-1/2"	–	32	✔	0.75	1.56	0.749	0.437	0.38	0.62	1/8 NPTF
2"	–	32	✔	0.88	2.08	1.374	0.625	0.50	0.75	1/4 NPTF
2-1/2"	–	32	✔	0.88	2.62	1.500	0.625	1/2	0.75	1/4 NPTF

Bore size	KK	KM	L	LB	PP	V	W	XJ SRG	XJ SRGM	Y	Z	ZJ SRG	ZJ SRGM
3/4"	1/4-28 UNF	5/8-18	0.34	2.91	0.62	0.09	0.50	3.75	3.75	0.97	0.251	4.03	4.03
1-1/16"	5/16-24 UNF	5/8-18	0.34	–	0.62	0.09	0.62	3.84	–	1.19	0.251	4.12	4.28
1-1/2"	7/16-20 UNF	3/4-16	0.50	–	0.81	0.09	0.88	4.38	4.63	1.50	0.376	4.75	5.00
2"	1/2-20 UNF	1-1/4-12	0.56	–	1.03	0.12	1.19	5.62	5.91	–	0.376	6.06	6.34
2-1/2"	1/2-20 UNF	1-3/8-12	0.56	–	1.03	0.13	1.19	5.62	5.62	1.84	0.376	6.06	6.06

† Mounting nuts sold seperately for all series SRG

Piston Rod Clevis

Assembly includes pin and (2) retainer rings and (1) jam nut.

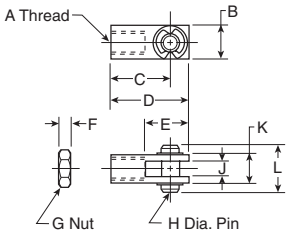

Bore size	A	B	C	D	E	F	G	H	J	K	L	Part number
3/4	1/4-28	.50	.94	1.19	.68	.16	1/4-28	.25	.25	.50	.69	L077130200
1-1/16	5/16-24	.50	.94	1.19	.68	.19	5/16-24	.25	.25	.50	.69	L077130300
1-1/2	7/16-20	.75	1.31	1.69	.94	.25	7/16-20	.38	.38	.75	1.03	L077130400
2, 2-1/2	1/2-20	.75	1.31	1.69	.94	.31	1/2-20	.38	.38	.75	1.03	L077130500

Pivot Bracket Assembly

Assembly includes pin and (2) retainer rings.

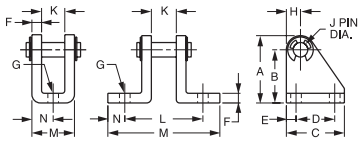

Bore size	A	B	C	D	E	F	G	H	J	K	L	M	N	Part number
3/4, 1-1/16	1.18	.88	1.12	.75	.19	.12	.27	.30	.250	.38	1.25	2.00	.38	L077150200
1-1/2	1.75	1.38	1.50	1.00	.25	.25	.27	.37	.375	.62	2.00	2.88	.44	L077150400
2, 2-1/2	1.75	1.38	1.50	1.00	.25	.25	.27	.37	.375	.75	2.12	3.00	.44	L077150500

Stainless steel.

Foot Brackets

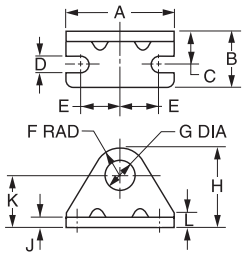

Bore size	A	B	C	D	E	F	G	H	J	K	L	Part number
3/4, 1-1/16	1.88	1.00	.56	.27	.75	.56	.63	1.38	.12	.81	.25	L077160040
1-1/2	2.50	1.50	.75	.27	.94	.75	.75	1.75	.12	1.00	.38	L077160048
2	3.12	1.62	1.00	.34	1.12	1.00	1.38	2.50	.25	1.50	.62	L077160124
2-1/2	3.75	1.62	1.00	.35	1.44	1.25	1.51	3.00	.25	1.75	.75	L077160132

Stainless steel.

Mounting Nut

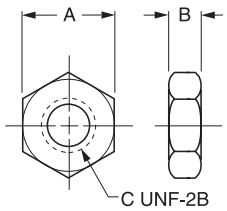

Bore size	A	B	C	Part number
3/4, 1-1/16	.94	.38	5/8-18	L077170800
1-1/2	1.12	.42	3/4-16	L077170900
2	1.88	.50	1-1/4-12	L077171200
2-1/2	2.06	.78	1-3/8-12	L077171400

Stainless steel.

SRX Series

PISTON ROD
Hard chrome-plated piston rod polished to a 6-10 Ra surface finish with an anodized steel male rod stud for long seal life and minimal surface drag.

BUSHING
Oil impregnated bronze rod bushing provides maximum bearing surface area, minimal mod deflection and long service life.

CYLINDER BODY
304 Stainless Steel cylinder body rated for non-lube service resists corrosion and minimizes maintenance.

SEALS
Standard "LipSeal" piston and rod seal provides maximum sealing capability and long life. Optional low friction piston seal is available.

LRT
LRT can be easily removed for maintenance, saving cost of purchasing a new cylinder.

CONNECTOR
Optional "flying lead" or 3-pin connector allows maximum flexibility for the end user.

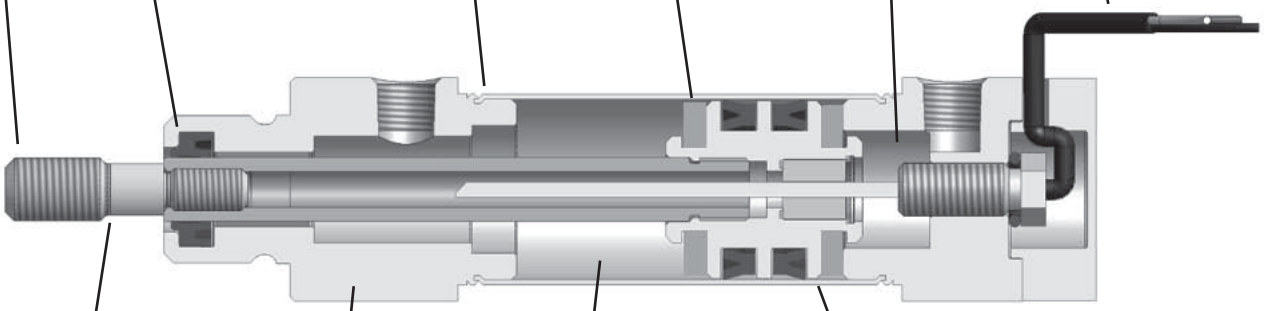

OUTBOARD ROD SEAL
Minimizes dirt and contaminant migration into the cylinder.

END CAPS
Precision machined aluminum end caps provide excellent corrosion resistance and smooth breakaway.

OPTIONAL BUMPERS
Buna-N bumpers reduce noise and provide cushioning for the most demanding applications.

UNITIZED CONSTRUCTION
Precision double-rolled unitized construction provides durable, leak proof service and long life.

Features

- Continuous position feedback
- Bore sizes: 1-1/16" to 3"
- Signal input: 5 to 24 VDC
- Signal output (w/o controls): DC ratiometric voltage*
- Signal output (w/controls): 0 to 10 VDC or 4 to 20 mA
- Strokes: Available in any practical stroke length up to 24"

*Mega Ohm impedance interface device suggested for limiting sensor current if controller is not used.

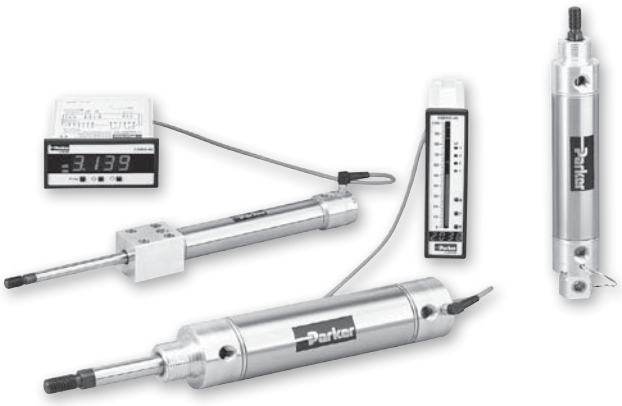

Operating information

Operating pressure:	150 PSIG (10.3 bar)
Temperature range:	40°F to 160°F (4.4°C to 71°C)
Filtration requirements:	40 micron, dry filtered air

Ordering information

1.50"	DXP	P	SRX	B	F	S	3	6.00"

Bore size

1.06"
1.50"
2.00"
2.50"
3.00"

Mounting style

D	Nose mount
DXP	Nose and pivot mount
BFD	Front block mount

Connector style

P	Plug
F	Flying leads

Piston

B	Bumper*

Leave blank if not required.

Seals

F	Low friction

Leave blank if not required.

Special

S	Special

Leave blank if special modification is not required.

Non-standard rod dimension

3	Non-standard dimension

Leave blank if special rod end dimension is not required.

NOTE: For non-standard / special rod ends, see below.

Stroke

Stroke in inches

* Incorporating bumpers adds 1/4" of overall length to the cylinder.

Sensors
See section L for sensors.

For ordering purposes, when special options or common modifications are requested, the factory will assign a sequential part number in place of the model number.

Non-standard rods

For non-standard rod dimensions, or undersized rod end threads, put a "3" in model number and describe the rod using the letters shown in the drawing. It is necessary to specify only those dimensions that are non-standard.
LE is measured in retracted position.

Full diameter rod end threads

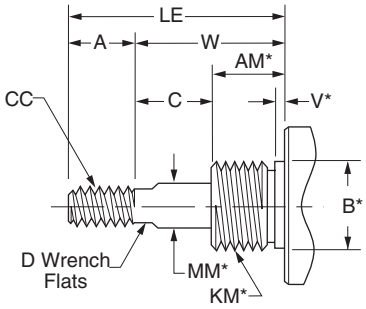

Undersized rod end threads

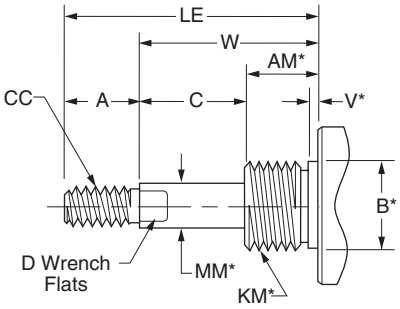

* Requires an "S" designation in model number.

General Specifications

- Bore sizes: 1-1/16", 1-1/2", 2", 2-1/2", 3"
- Rod sizes: 0.38" – 0.75"
- Rod ends: Standard male
- Mounts: – Nose mount (D)
  – Front block mount (BFD)
  – Nose and pivot mount (DXP)
- Rated air pressure: 150 PSI Air
- Standard temperature: 40°F to 160°F
- Strokes: Available in any practical stroke length up to 24"
- Bumpers: Optional

Available Mountings

Style D
Nose Mount

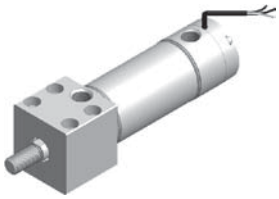

Style BFD
Front Block Mount

Style DXP
Nose and Pivot Mount

Theory of Operation

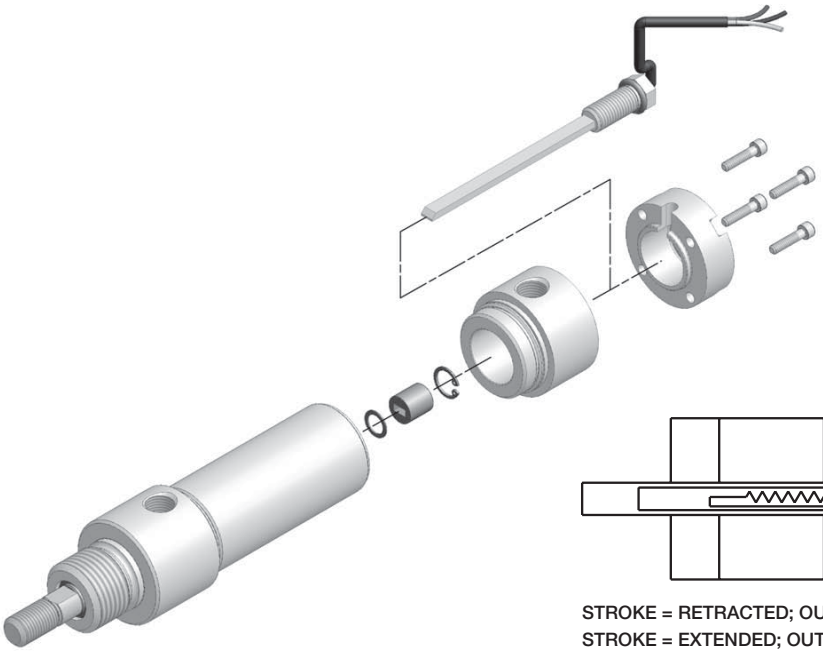

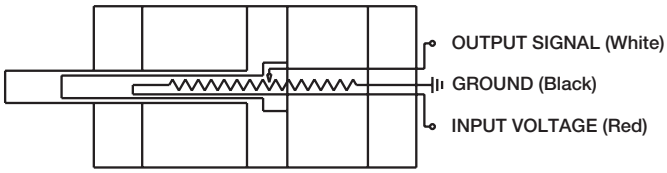

STROKE = RETRACTED; OUTPUT VOLTAGE = 0 VOLTS (Approx.)
STROKE = EXTENDED; OUTPUT VOLTAGE = MAXIMUM INPUT VOLTAGE (Approx.)

The SRX Series Linear Resistive Transducer (LRT) is a position sensor that uses a resistive element, and wiper assembly, to provide a continuous analog output signal relative to the cylinders position. The LRT is a single element type linear potentiometer, with two independent elements mounted on either side of an anodized aluminum extrusion. The LRT operates as a voltage divider by creating a short between the wiper extrusion and the wiper assembly. The position of the wiper changes the resistive load proportionally to its position along the stroke length of the cylinder.

Supplying a 5 to 24VDC voltage energizes the LRT. As the cylinder travels through its range of stroke, the resistive load changes, thus causing a proportional voltage output change of the LRT. The output voltage, at the endpoint of cylinder stroke, is dictated by the input voltage applied across the device.

The probe is mounted into the cap end of the cylinder and inserted into the hollow piston rod assembly. When replacing the probe, care must be taken to align the wiper block with the profile of the LRT extrusion. Please review the above schematic and cutaway drawing for reference purposes.

MLRT

Repeatability	±0.001" (interface electronics dependent)
Non Linearity	±1% of Full stroke (18" stroke max.)
Resolution	Infinite
Signal Input	5 to 24 VDC
Signal Output (w/o controls):	DC ratiometric voltage*
Signal Output (w/ controls):	0 to 10 VDC or 4 to 20 mA
Maximum Speed	50" per second
Rated Life of MLRT	500 Million inches of wiper travel
Pressure Rating	150 psi
Temperature Rating	40°F to 165°F
Resistance Rating	1,000 Ohms per inch ±20%
Connection Options	6" Flying leads or 3-pin nano connector

* 1 Mega Ohm impedance interface device suggested for limiting sensor current if the controller is not used.

MLRT Circuit Diagram

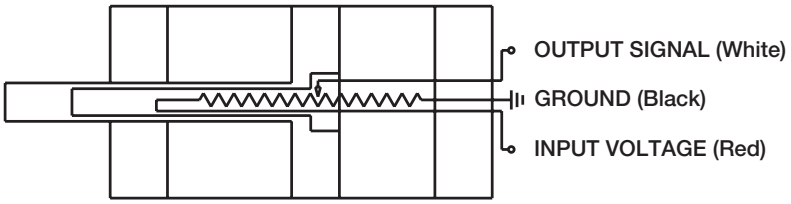

STROKE = RETRACTED; OUTPUT VOLTAGE = 0 VOLTS (Approx.)
STROKE = EXTENDED; OUTPUT VOLTAGE = MAXIMUM INPUT VOLTAGE (Approx.)

MLRT Replacement Kits

For each MLRT replacement kit order, please specify the part number listed below along with the cylinder stroke length and quantity.

A Service Bulletin is included with each kit.

MLRT with Flying Leads
Part #**L07831**
Example: L07831, 6" Stroke, Qty. 1

MLRT with Plug Connector
Select part number from table
Example: L078320000, 4" Stroke, Qty. 1

Bore	Mount	Plug connector MLRT kit Part number
1-1/16"	D, BFD	**L078320000**
	DXP	**L078320001**
1-1/2"	D, BFD	**L078320002**
	DXP	**L078320003**
2"	D, BFD	**L078320004**
	DXP	**L078320005**
2-1/2"	D, BFD	**L078320006**
	DXP	**L078320007**
3"	D, BFD	**L078320008**
	DXP	**L078320009**

1-1/16" Bore Cylinders

Style D

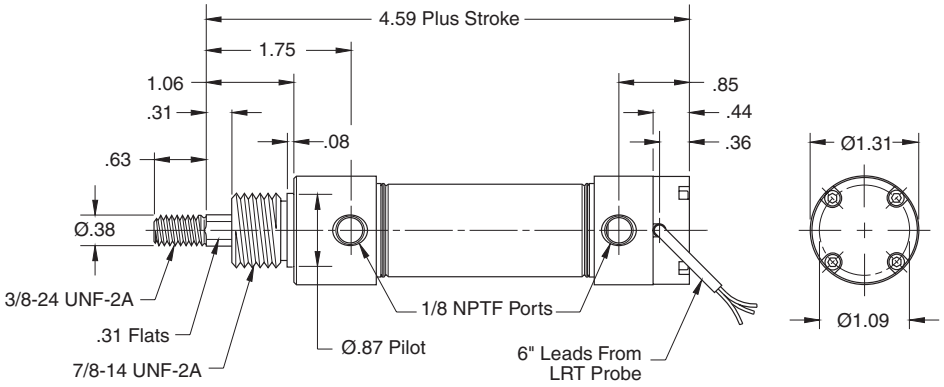

Style DXP

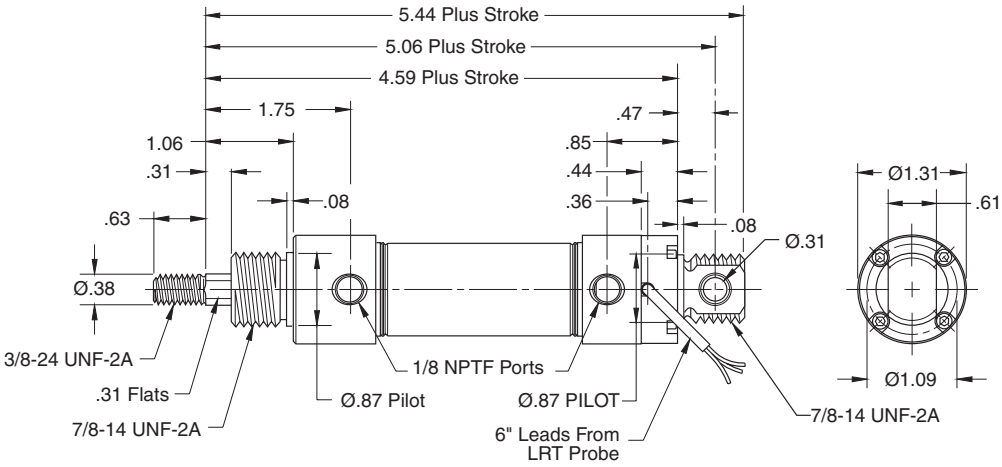

Style BFD

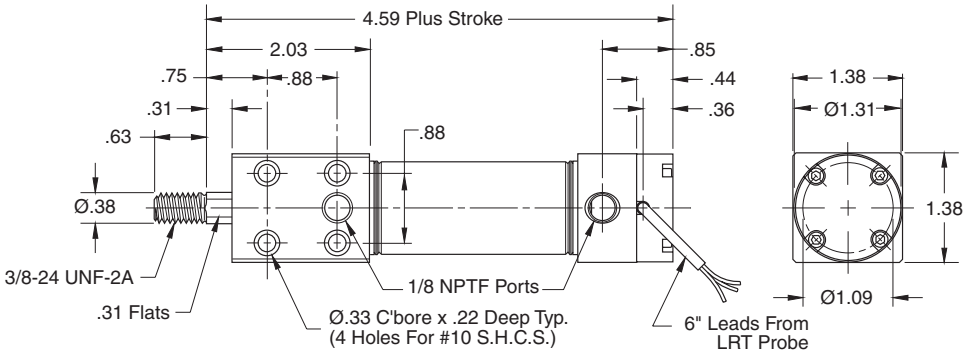

1-1/2" Bore Cylinders

Style D

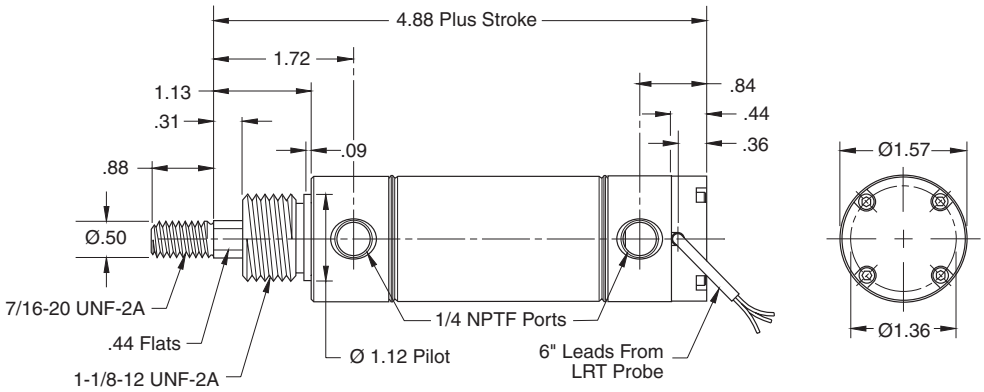

Style DXP

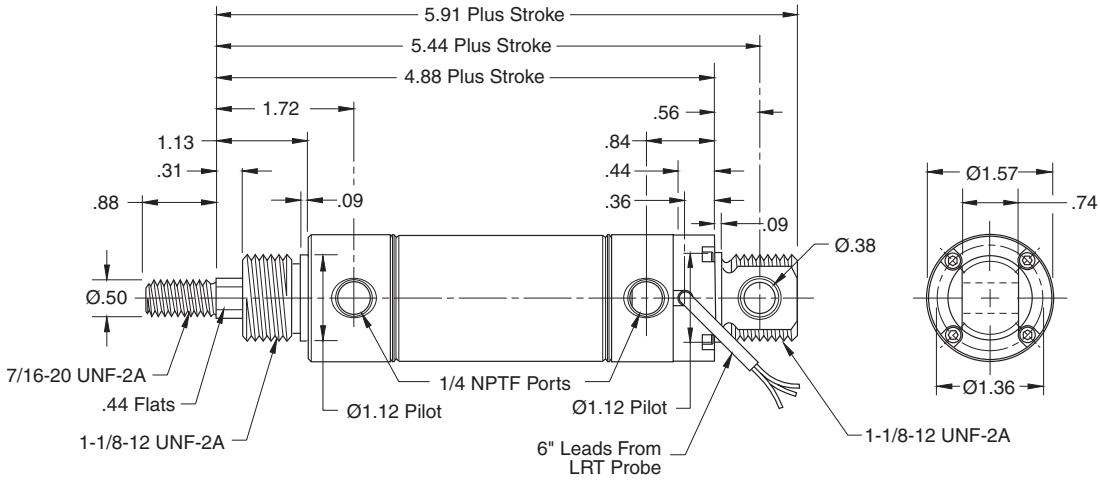

Style BFD

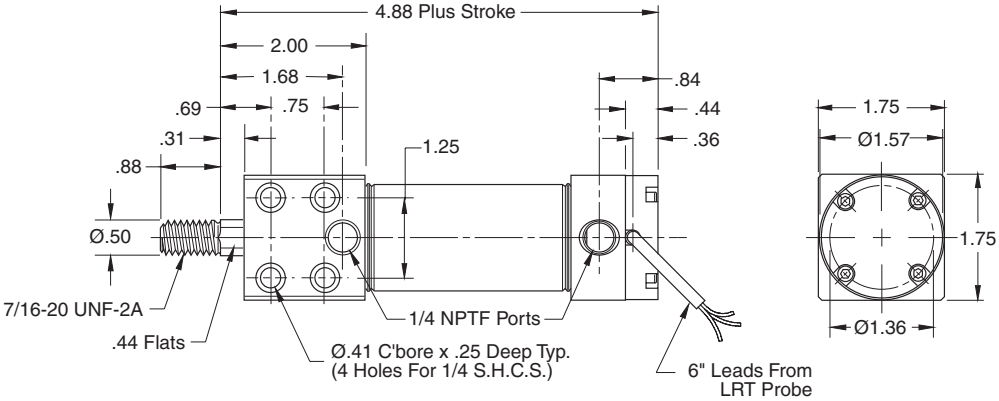

2" Bore Cylinders

Style D

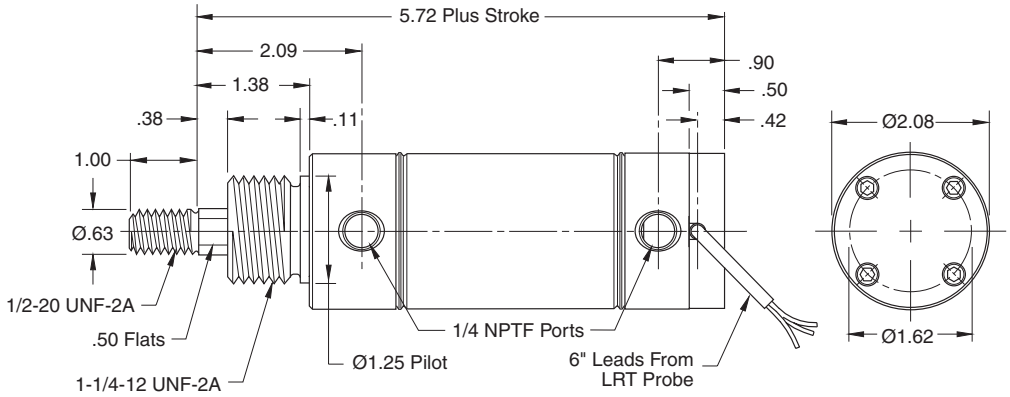

Style DXP

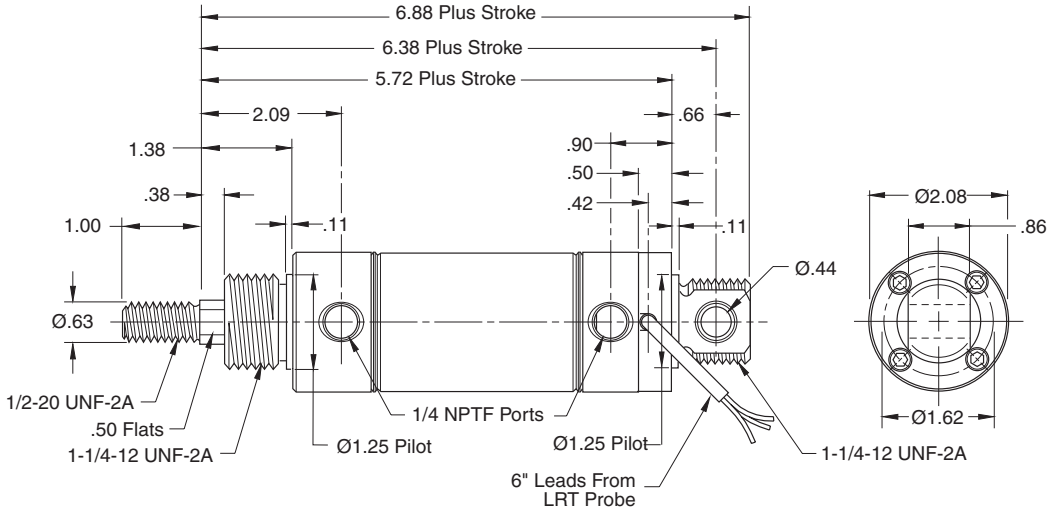

Style BFD

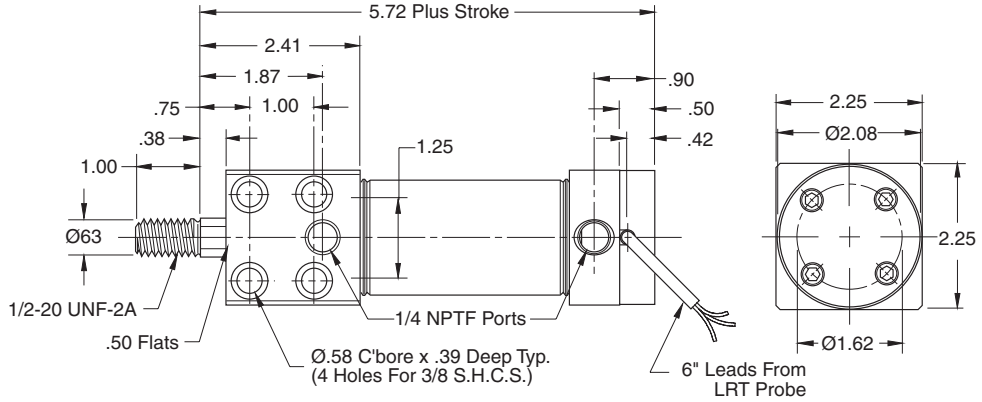

2-1/2" Bore Cylinders

Style D

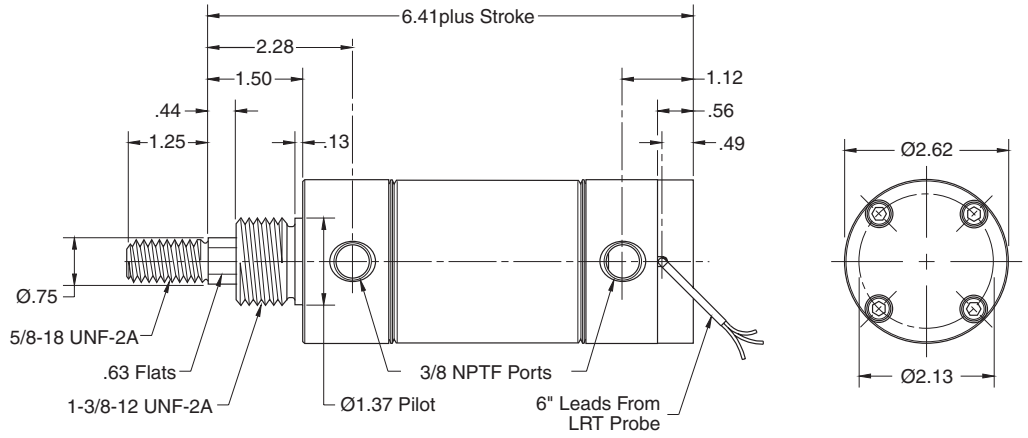

Style DXP

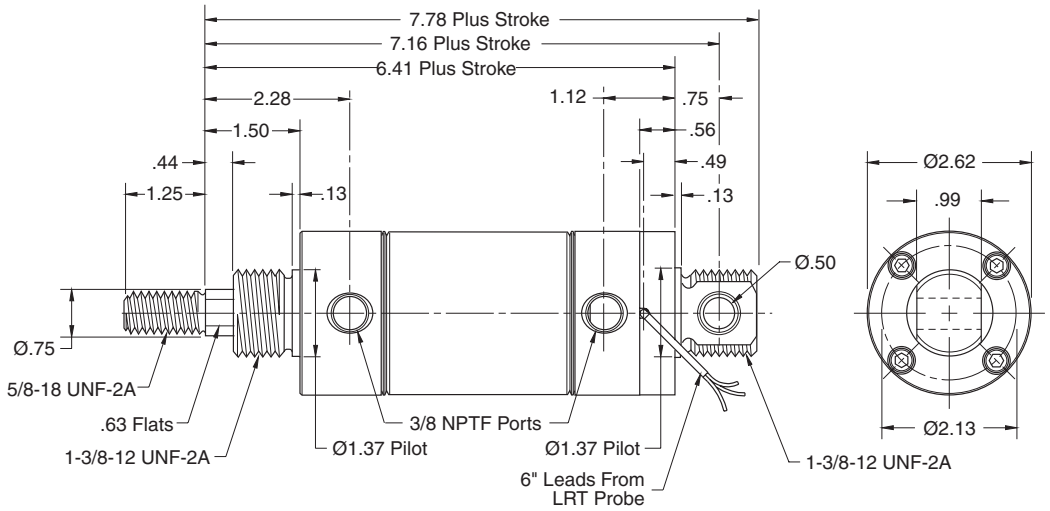

Style BFD

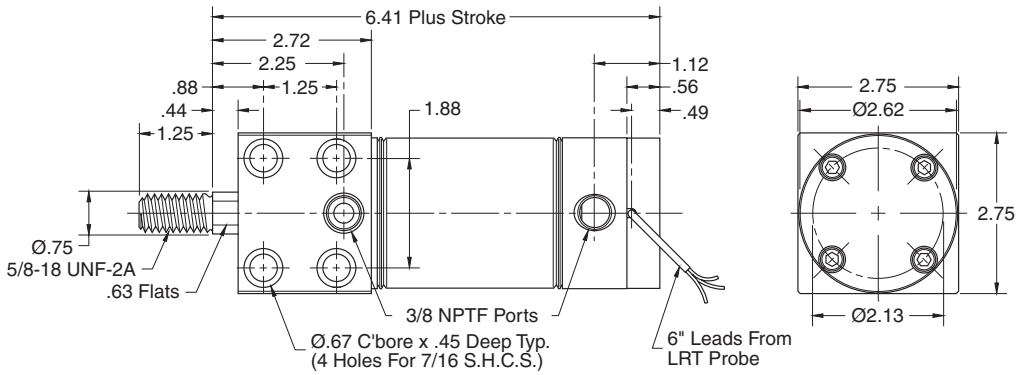

3" Bore Cylinders

Style D

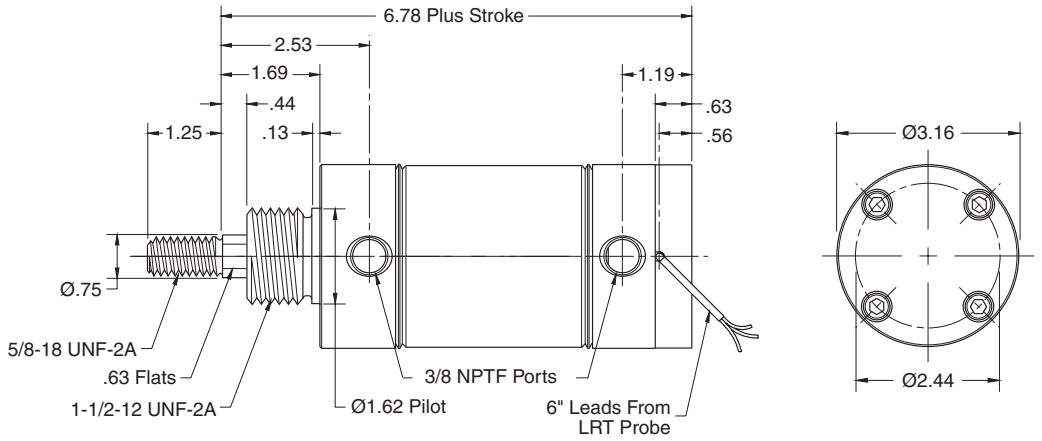

Style DXP

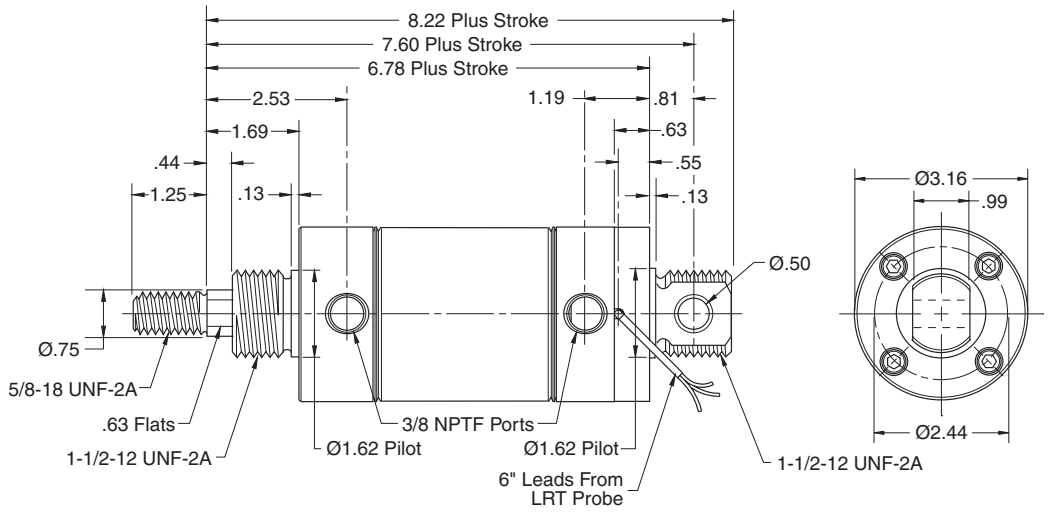

Style BFD

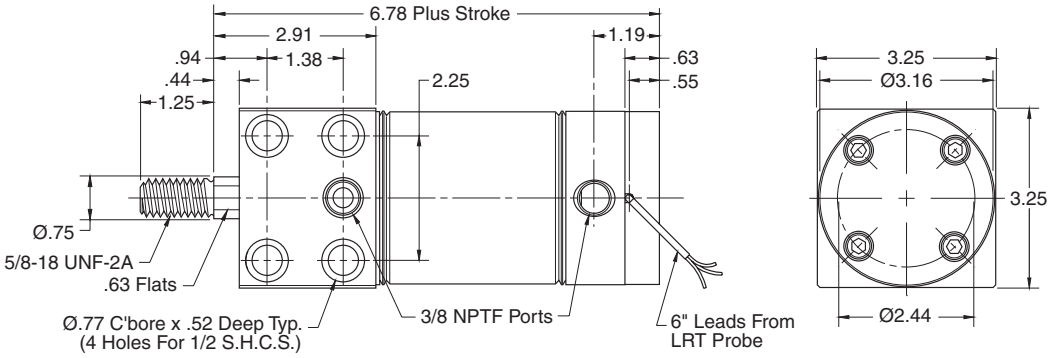

Piston Rod Clevis

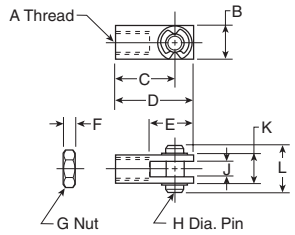

Bore size	A	B	C	D	E	F	G	H	J	K	L	Part number
1-1/16	3/8–24	.63	1.38	1.69	.94	.22	3/8–24	.31	.32	.63	.88	**L071300350**
1-1/2	7/16–20	.75	1.31	1.69	.94	.25	7/16–20	.38	.38	.75	1.03	**L071300400**
2	1/2–20	.88	1.88	2.31	1.31	.31	1/2–20	.44	.45	.88	1.14	**L071300550**
2-1/2, 3	5/8–18	1.00	2.25	2.75	1.50	.38	5/8–18	.50	.51	1.00	1.38	**L071300600**

Pivot Brackets

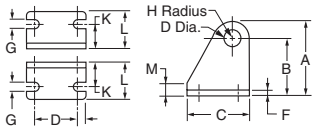

Bore size	A	B	C	D	E	F	G	H	J	K	L	M	Part number
1-1/16	1.31	1.00	1.31	.81	.25	.16	.28	.31	.315	.56	.88	.28	**L071310400**
1-1/2	1.63	1.25	1.63	1.00	.31	.19	.34	.38	.378	.69	1.13	.31	**L071310500**
2	1.81	1.38	1.81	1.19	.31	.25	.34	.44	.440	.75	1.19	.38	**L071310600**
2-1/2, 3	2.13	1.63	2.13	1.38	.38	.25	.41	.50	.503	.88	1.38	.38	**L071310700**

Pivot Brackets

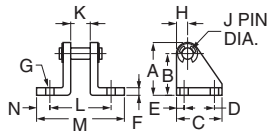

Bore size	A	B	C	D	E	F	G	H	J	K	L	M	N	Part number
1-1/16	1.31	1.00	1.31	.81	.25	.16	.28	.31	.312	.62	1.75	2.38	.31	**L071320250**
1-1/2	1.63	1.25	1.63	1.00	.31	.19	.34	.38	.375	.75	2.13	3.00	.44	**L071320350**
2	1.81	1.38	1.81	1.19	.31	.25	.34	.44	.437	.88	2.38	3.25	.44	**L071320450**
2-1/2, 3	2.13	1.63	2.13	1.38	.38	.25	.41	.50	.500	1.00	2.75	3.75	.50	**L071320550**

Foot Brackets

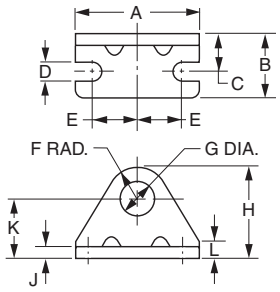

Bore size	A	B	C	D	E	F	G	H	J	K	L	Part number
1-1/16	2.13	1.16	.66	.28	.75	.75	.88	1.75	.16	1.00	.38	**L073790056**
1-1/2	2.75	1.44	.81	.35	1.00	.94	1.13	2.19	.19	1.25	.38	**L073790108**
2	3.00	1.59	.91	.35	1.19	1.06	1.26	2.44	.22	1.38	.44	**L073790116**
2-1/2	3.75	1.88	1.06	.41	1.50	1.19	1.38	2.81	.25	1.63	.50	**L073790125**
3	4.38	1.62	1.00	.35	1.75	1.25	1.64	3.14	.25	1.89	.89	**L073790140**

Mounting Nut

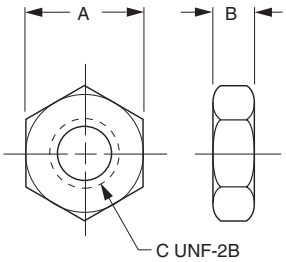

Bore size	A	B	C	Part number
1-1/16	1.31	.48	7/8–14	**L073801000**
1-1/2	1.69	.61	1-1/8–12	**L073801300**
2	1.88	.50	1-1/4–12	**L073801200**
2-1/2	2.06	.78	1-3/8–12	**L073801400**
3	2.25	.84	1-1/2–12	**L073801500**

Most popular.

3-pin Nano Connector

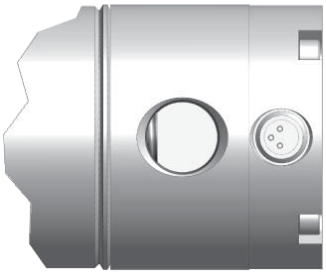

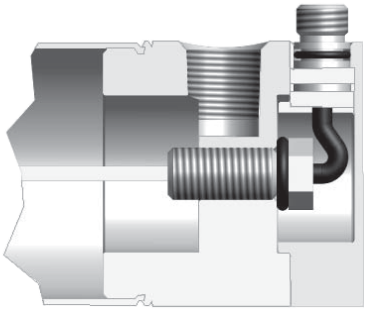

Wire Color

Wires	6" Leads	Plug option
Input	Red	Brown
Ground	Black	Blue
Output	White	Black

Connectors

Cable Length	Threaded straight connector	Threaded right angle connector
5 meters	**086620T005**	**086620R005**
2 meters	**086620T002**	**086620R002**

Straight Connector

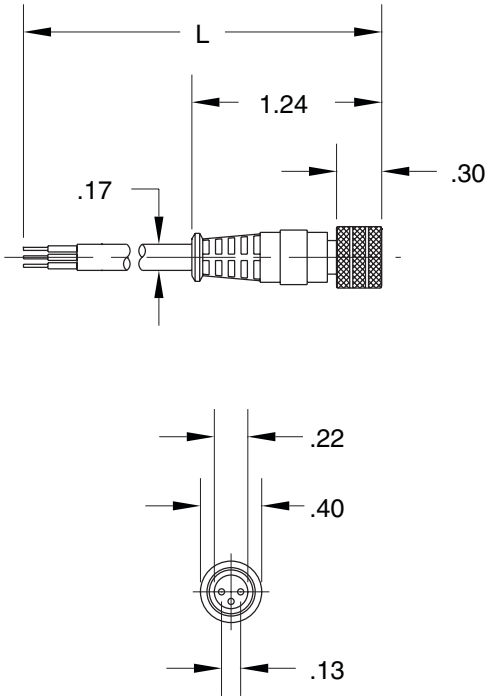

Right-angle Connector

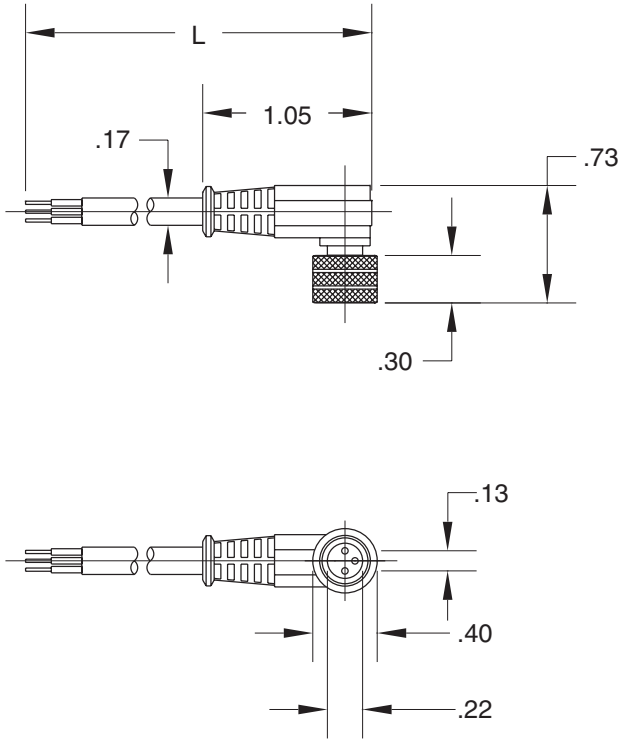

Dual Set Point Controller, Part #149344000____

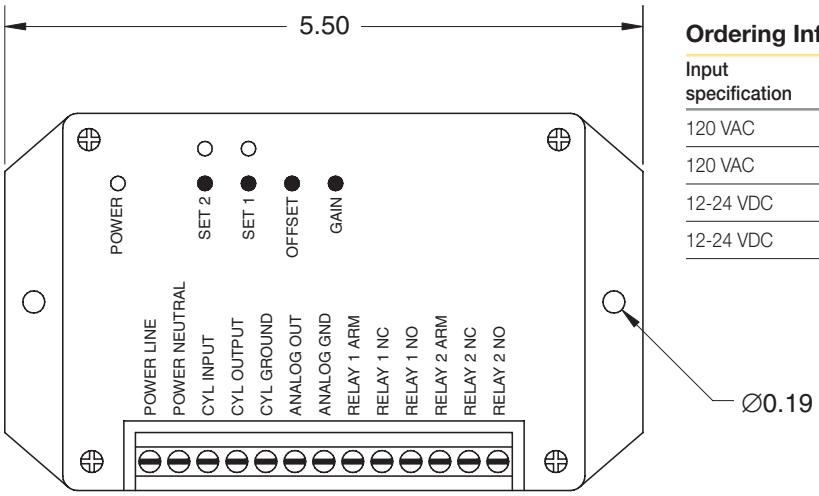

Ordering Information

Input specification	Output specification	Part number
120 VAC	0-10 V	**1493440002**
120 VAC	4-20 mA	**1493440003**
12-24 VDC	0-10 V	**1493440004**
12-24 VDC	4-20mA	**1493440005**

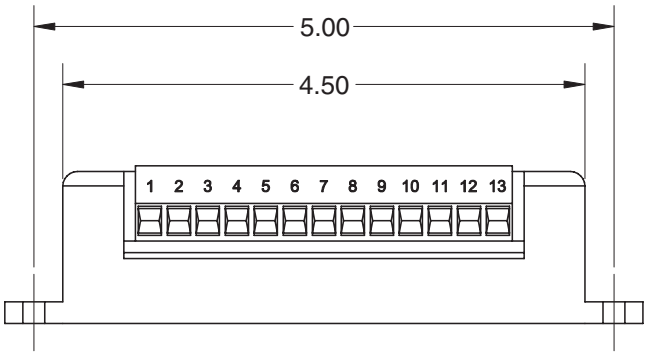

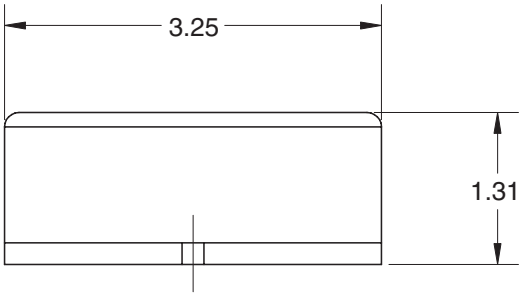

Specifications

Power Input Requirements	12 to 24 VDC, 0.1 amps, or 120 VAC, 60 Hz, 0.1 amps
Output specifications – Set Point	Relay (2) 2 amps @ 24 VDC or 120 VAC
Output Specifications – Scalable	0 to 10 V, 1 mA max. output current (10K ohm impedance min.) 4 to 20mA, into 500-ohm max. impedance
Maximum Zero Offset	50% of cylinder stroke
Minimum Span Range	50% of cylinder stroke
Enclosure Dimensions	1.31" h x 5.50" w x 3.25" d
Electronics Temperature Operating Range	40°F to 160°F

Please reference Parker Bulletin #0971-G-B2 for information regarding programming and operation of this controller.

P1A Series

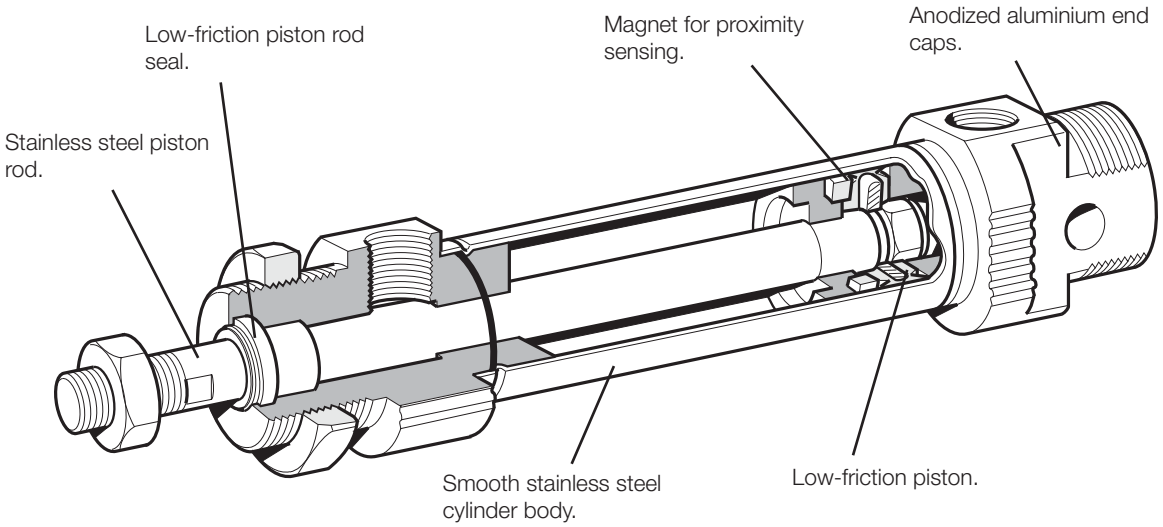

The Parker P1A series of pneumatic cylinders are intended for use in a wide range of applications. These cylinders are particularly suitable for lighter duties in the packaging, food and textile industries. Hygienic design, the use of corrosion-resistant materials and initial lubrication with our food-grade grease makes the cylinders suitable for food industry applications.

Proven design and high quality manufacturing throughout ensure long service life and optimum performance.

Mounting dimensions are in accordance with ISO 6432 and CETOP RP52P. This greatly simplifies installation and world-wide interchangeability.

The Mini ISO range is available with bumpers or adjustable pneumatic cushioning. Controlled by simple bleed screws for fine adjustment, the adjustable cushioned cylinders can be operated with higher mass loads and at higher speeds than those with fixed end cushioning bumpers.

The Mini ISO range is also available in an all-stainless version with piston rod, cylinder body and end covers of stainless steel for use in extremely severe environments. Consult the Wadsworth, Ohio facility for more information.

A complete range of sensors for proximity sensing is available as accessories: both reed and solid state sensors are available. Either can be supplied with flying leads or cable and multi-pin connector. See Electronic Sensors section for specifications and part numbers.

Double Acting

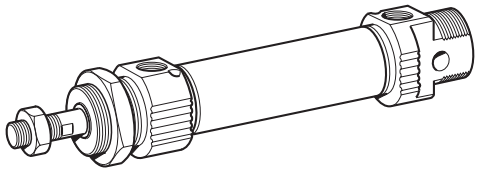

Double Acting, Double Rod

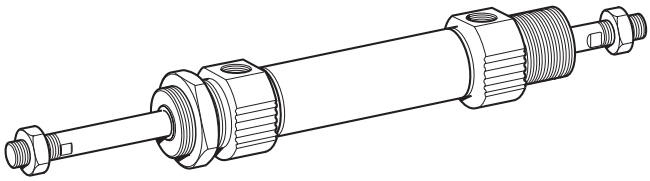

Single-Acting, Spring Return

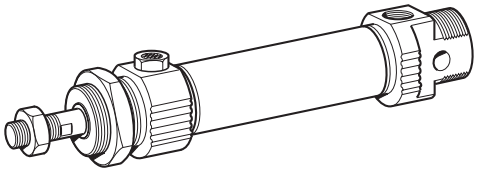

Single-Acting, Spring Extend

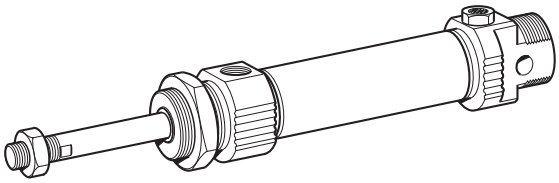

Features

- Conforms to ISO 6432 and CETOP RP52P standards
- 5 bore sizes, 10mm to 25mm
- Stainless steel body with black anodized aluminum end caps
- Stainless steel piston rod
- Magnetic piston and bumpers standard

Operating information

Operating pressure:	10 bar (145 PSIG)
Temperature range:	
Working	-20°C to 80°C (-4°F to 176°F)
High temperature version	
20mm, 25mm	-10°C to 150°C (14°F to 302°F)
10mm, 12mm, 16mm	-10°C to 120°C (14°F to 248°F)
Low temperature version	-40°C to 60°C (-40°F to 140°F)
Filtration requirements:	40 micron, dry filtered air

Ordering information

P1A – S 016 M S – 0025

Bore size	
010	10mm
012	12mm
016	16mm
020	20mm
025	25mm

Cylinder type / function		
M		Double-acting, adjustable cushioning. Ø16-25 mm. Not for sealing material type F.
D		Double-acting, bumpers, Ø10 - Ø25
F	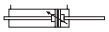	Double-acting, adjustable cushioning, double rod, Ø16-25 mm. Not for sealing material type F.
K		Double-acting, bumpers, double rod, Ø10 - Ø25
S		Single-acting, bumpers, spring return for retract stroke, Ø10-25 mm
T		Single-acting, bumpers, spring extend for advance stroke, Ø16-25 mm

Stroke length, mm
E.g. 0025 = 25 mm For standard stroke length and max length see table below.

Sealing material	
S	Standard -20°C to 80°C (-4°F to 176°F) Magnetic piston
F	High temperature: Ø12 mm, 16 mm, 20 mm and 25 mm -10°C to 150°C. (14°F to 302°F) Non magnetic piston
V	External seals of fluorinated rubber -20°C to +80°C (-4°F to 176°F) Magnetic piston

Stroke Lengths

Cylinder model	Bore size	Stroke Length (• = standard, ◦ = non-standard, blank = N/A)															
		10	15	20	25*	30	40	50*	80*	100*	125*	160*	200*	250*	320*	400*	500*
Double acting with fixed end-cushioning:																	
P1A-S 010 D	10	•	•	•	•	•	•	•	•	•	•	◦	◦	◦	◦	◦	◦
P1A-S 012 D	12	•	•	•	•	•	•	•	•	•	•	•	•	◦	◦	◦	◦
P1A-S 016 D	16	•	•	•	•	•	•	•	•	•	•	•	•	◦	◦	◦	◦
P1A-S 020 D	20	•	•	•	•	•	•	•	•	•	•	•	•	•	•	◦	◦
P1A-S 025 D	25	•	•	•	•	•	•	•	•	•	•	•	•	•	•	◦	◦
Double acting with adjustable end-cushioning:																	
P1A-S 016 M	16			•	•	•	•	•	•	•	•	•	•	•	•	•	•
P1A-S 020 M	20			•	•	•	•	•	•	•	•	•	•	•	•	•	•
P1A-S 025 M	25			•	•	•	•	•	•	•	•	•	•	•	•	•	•
Single acting:																	
P1A-S 010 SS	10	•	•	◦	•	◦	•	•	•								
P1A-S 012 SS	12	•	•	◦	•	◦	•	•	•								
P1A-S 016 SS(TS)	16	•	•	◦	•	◦	•	•	•**								
P1A-S 020 SS(TS)	20	•	•	◦	•	◦	•	•	•								
P1A-S 025 SS(TS)	25	•	•	◦	•	◦	•	•	•								

* Standard stroke lengths in mm according to ISO 4393
** Not for the TS version

Sensors

See section L for sensors.

Parker Hannifin Corporation
Pneumatic Division
Richland, Michigan
www.parker.com/pneumatics

Standard Specifications

- Working pressure max 10 bar (145 PSI)
- Working temperature max 80°C (176°F)
  min –20°C (4°F)
- High-temperature version max 150°C (Ø20 and 25 mm) 302°F
  120°C (Ø10, 12 and 16 mm) 248°F
  min –10°C (14°F)
- Prelubricated, further lubrication is not normally necessary.
- If additional lubrication is introduced it must be continued.

Material Specification

Piston rod	Stainless steel, DIN X 10 CrNiS 18 9
Piston rod seal	Fluorocarbon rubber FPM
Piston rod bearing	Multilayer PTFE/steel
End covers	Anodized aluminium
O-ring, internal	Nitrile rubber, NBR
Cylinder barrel	Stainless steel, DIN X 5 CrNi 18 10
Piston, complete	Nitrile rubber, NBR/steel
Magnet holder	Thermoplastic elastomer
Magnet	Plastic-coated magnetic material
Return spring	Surface-treated steel
Cushioning screw	Stainless steel, DIN X 10 CrNiS 18 9

Cylinders are supplied complete with nose mounting and piston rod nuts.

Cylinders with double piston rods are supplied with two piston rod nuts

Variants Mini ISO:

High-temperature version, type F:

Piston rod seal	Fluorocarbon rubber, FPM
Piston complete, Ø10-Ø16	HNBR/steel
Piston complete, Ø20-Ø25	FPM/steel

PTFE and copper free cylinders, type N:

Piston rod bearing	PA plastic

Cylinders with outer sealings in fluorocarbon, type V:

Piston rod seal/ Scraper ring	Fluorocarbon rubber, FPM

Note: Spare part = new cylinder

Quick Reference

Model #	Cylinder Bore (mm)	Cylinder Area (cm^2)	Piston rod Dia. (mm)	Piston rod Area (cm^2)	Thread	Total weight at 0mm stroke (lbs)	Additional weight per 10mm stroke (lbs)	Air consumption	Port size
Double acting, cushioned stroke									
P1A-S 010 D	10	0.78	4	0.13	M4	0.09	0.007	0.0004 †	M5
P1A-S 012 D	12	1.13	6	0.28	M6	0.15	0.009	0.0005 †	M5
P1A-S 016 D	16	2.01	6	0.28	M6	0.20	0.012	0.0009 †	M5
P1A-S 020 D	20	3.14	8	0.50	M8	0.40	0.015	0.0010 †	G1/8
P1A-S 025 D	25	4.91	10	0.78	M10x1.25	0.89	0.025	0.0023 †	G1/8
Double acting, adjustable cushioning									
P1A-S 016 M	16	2.01	6	0.28	M6	0.20	0.012	0.0009 †	M5
P1A-S 020 M	20	3.14	8	0.50	M8	0.40	0.015	0.0010 †	G1/8
P1A-S 025 M	25	4.91	10	0.78	M10x1.25	0.89	0.025	0.0023 †	G1/8
Single acting									
P1A-S 010 SS	10	0.78	4	0.13	M4	0.09	0.007	0.0002 †	M5
P1A-S 012 SS	12	1.13	6	0.28	M6	0.18	0.009	0.0003 †	M5
P1A-S 016 SS(TS)	16	2.01	6	0.28	M6	0.22	0.012	0.0005 †	M5
P1A-S 020 SS(TS)	20	3.14	8	0.50	M8	0.40	0.015	0.0008 †	G1/8
P1A-S 025 SS(TS)	25	4.91	10	0.78	M10x1.25	0.58	0.025	0.0013 †	G1/8

† Free air consumption per 10 mm stroke length for a double stroke at 6 bar (87 PSI)

Cylinder Forces

Indicated cylinder forces are theoretical and should be reduced according to the working conditions.

Double Acting

Model number	Bore size mm	Theoretical Piston Force (lbs) at 6 bar (87 PSI) Extension	Retraction
P1A-S 010 D	10	10.57	8.76
P1A-S 012 D	12	15.07	11.25
P1A-S 016 D	16	26.98	23.15
P1A-S 020 D	20	42.27	35.52
P1A-S 025 D	25	66.10	55.53
P1A-S 016 M	16	26.98	23.16
P1A-S 020 M	20	42.27	35.52
P1A-S 025 M	25	66.10	55.53

Single Acting

Model number	Stroke	Theoretical piston force (lbs) at 6 bar (87 PSI) Spring retraction lbs. max	Spring retraction lbs. min	Spring extension lbs. max	Spring extension lbs. min
P1A-S 010 SS	10	8.5	8.1	2.4	2.0
	15	8.5	8.1	2.4	2.0
	25	8.7	8.1	2.4	2.0
	40	8.5	7.6	2.9	2.0
	50	8.7	7.6	2.9	1.7
	80	8.7	7.6	2.9	1.7
P1A-S 012 SS	10	11.9	11.4	3.6	3.1
	15	11.9	11.4	3.6	3.1
	25	12.3	11.4	3.6	2.7
	40	11.9	10.8	4.2	3.3
	50	11.9	10.8	4.2	3.1
	80	12.3	10.8	4.2	2.7
P1A-S 016 SS(TS)	10	22.0 (19.1)	22.2 (18.8)	4.7 (4.2)	4.0 (4.0)
	15	23.1 (19.3)	22.2 (18.8)	4.7 (4.2)	3.8 (3.8)
	25	23.8 (19.8)	22.2 (18.8)	4.7 (4.2)	3.3 (3.3)
	40	23.8 (20.3)	21.3 (18.8)	5.6 (4.2)	3.1 (3.1)
	50	24.2 (20.4)	21.3 (18.8)	5.6 (4.2)	2.7 (2.7)
	80	24.0 (21.3)	21.3 (18.8)	5.6 (4.2)	2.9 (2.9)
P1A-S 020 SS(TS)	10	36.6 (29.6)	36.1 (29.2)	6.1 (6.3)	5.6 (5.8)
	15	36.8 (29.8)	36.1 (29.2)	6.1 (6.3)	5.4 (5.6)
	25	37.5 (30.3)	36.1 (29.2)	6.1 (6.3)	4.7 (5.1)
	40	37.3 (31.0)	35.7 (29.2)	6.5 (6.3)	4.9 (4.9)
	50	37.7 (31.4)	35.7 (29.2)	6.5 (6.3)	4.5 (4.5)
	80	38.2 (31.2)	36.1 (24.2)	6.1 (11.2)	4.0 (4.2)
P1A-S 025 SS(TS)	10	57.5 (46.1)	56.9 (45.6)	9.2 (9.9)	8.5 (9.4)
	15	58.0 (46.5)	56.9 (45.6)	9.2 (9.9)	8.1 (9.0)
	25	58.9 (47.2)	56.9 (45.6)	9.2 (9.9)	7.2 (8.3)
	40	58.7 (48.1)	56.2 (45.6)	9.9 (9.9)	7.4 (7.4)
	50	59.4 (48.8)	56.2 (45.6)	9.9 (9.9)	6.7 (6.7)
	80	59.4 (50.1)	56.4 (46.3)	9.6 (9.2)	6.7 (5.4)

Cushioning

Use the diagram below to determine the necessary size of cylinder to provide the requisite cushioning performance. The maximum cushioning performance, as indicated in the diagram, is based on the following assumptions:

- Low load, i.e. low pressure drop across the piston
- Steady-state piston speed
- Correctly adjusted cushioning screw

The load is the sum of the internal and external friction, together with any gravity forces. At high relative loading it is recommended that, for a given speed, the load should be reduced by a factor of 2.5, or that, for a given mass, the speed should be reduced by a factor of 1.5. These factors apply in relation to the maximum performance as shown in the diagram.

Fixed End-Cushioning (Bumpers)

Speed Ft./Sec.

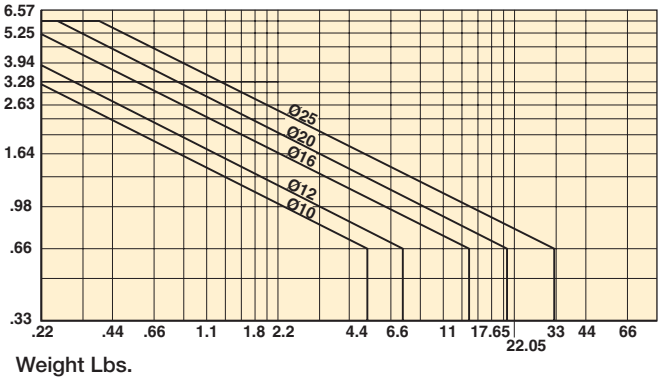

Weight Lbs.

Adjustable Pneumatic End-Cushioning

Speed Ft./Sec.

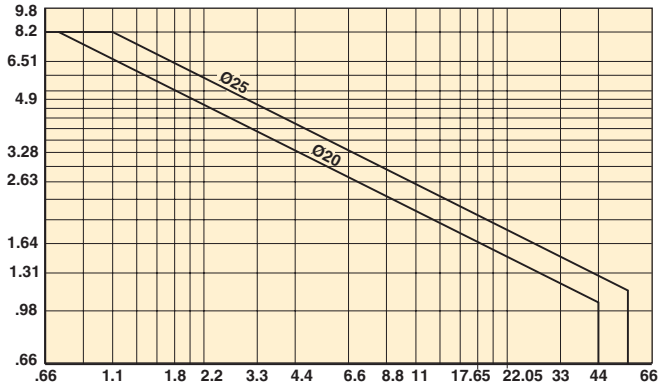

Weight Lbs.

Double-acting cushioned cylinders

Adjustable pneumatic cushioning permits greater loads and higher operating speeds, making the cylinders suitable for more demanding applications.

These cylinders are available in bores of 16, 20 and 25 mm, with stroke lengths from 20 mm to 500 mm.

Double acting cylinders

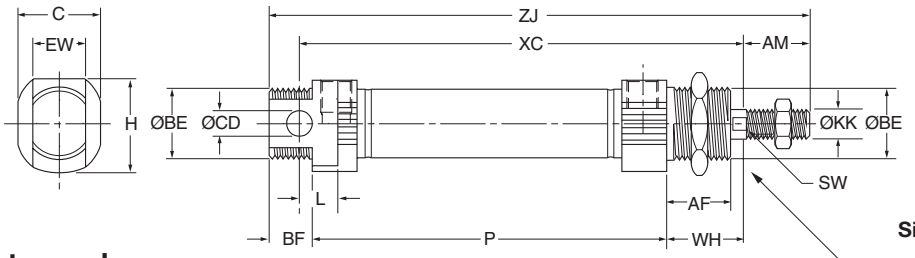

Single Acting

Double piston rod

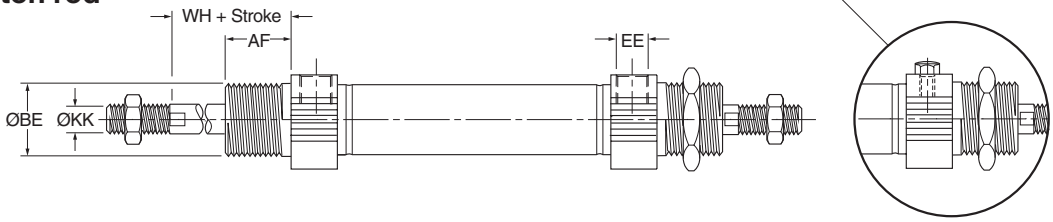

Bore size mm	AM $_{0/-2}$ mm	BE	AF mm	BF mm	C mm	CD $_{h9}$ mm	EE	EW mm	H mm	KK	L mm	SW mm	WH$\pm_{1.2}$ mm
10	12	M12x1.25	12	10	14.0	4	M5	8	16.7	M4	6	–	16
12	16	M16x1.5	18	13	18.0	6	M5	12	19.1	M6	9	5	22
16[1]	16	M16x1.5	18	13	18.0	6	M5	12	19.1	M6	9	5	22
16[2]	16	M16x1.5	18	13	25.0	6	M5	12	24.0	M6	9	5	22
20	20	M22x1.5	20	14	24.0	8	G1/8	16	27.0	M8	12	7	24
25	22	M22x1.5	22	14	27.5	8	G1/8	16	29.0	M10x1.25	12	9	28

1) P1A-S016DS/SS/TS 2) P1A-S016MS

Double acting cylinders

Bore size mm	XC mm	ZJ mm	P mm
10	64 + stroke	84 + stroke	46 + stroke
12	75 + stroke	99 + stroke	48 + stroke
16	82 + stroke	104 + stroke	53 + stroke
20	95 + stroke	125 + stroke	67 + stroke
25	104 + stroke	132 + stroke	68 + stroke

Single-acting, spring return, type SS

Bore size	XC (mm) at various strokes						ZJ (mm) at various strokes						P (mm) at various strokes					
mm	**10**	**15**	**25**	**40**	**50**	**80**	**10**	**15**	**25**	**40**	**50**	**80**	**10**	**15**	**25**	**40**	**50**	**80**
10	74	79	89	126	136	174	94	99	109	146	156	194	56	61	71	108	118	156
12	85	90	100	132	142	185	109	114	124	156	166	209	58	63	73	105	115	158
16	92	97	107	122	132	184	114	119	129	144	154	206	63	68	78	93	103	155
20	105	110	120	135	145	191	135	140	150	165	175	221	77	82	92	107	117	163
25	114	119	129	144	154	201	142	147	157	172	182	229	78	83	93	108	118	165

Single-acting, spring-extended, type TS

Bore size	ZC [3] (mm) at various strokes						ZJ [3] (mm) at various strokes						P (mm) at various strokes					
mm	**10**	**15**	**25**	**40**	**50**	**80**	**10**	**15**	**25**	**40**	**50**	**80**	**10**	**15**	**25**	**40**	**50**	**80**
16	107	112	122	137	147	–	134	139	149	164	174	–	78	83	93	108	118	–
20	120	125	135	150	160	195	156	161	171	186	196	231	92	97	107	122	132	167
25	129	134	144	159	169	205	165	170	180	195	205	241	93	98	108	123	133	169

3) With piston rod retracted, as shown in the dimension drawing
Length tolerances ±1 mm Stroke length tolerance +1.5/0 mm

Flange - MF8

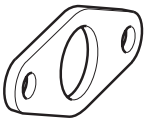

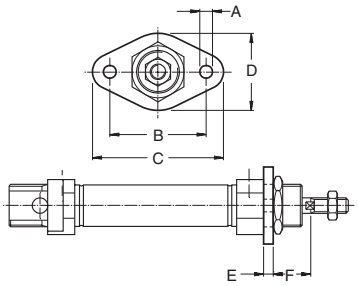

Cylinder Ø mm	A	B	C	D	E	F	Weight lbs	Part number
10	4.5	30	40	22	3	13	0.025	**P1A-4CMB**
12-16	5.5	40	52	30	4	18	0.055	**P1A-4DMB**
20	6.6	50	66	40	5	19	0.100	**P1A-4HMB**
25	6.6	50	66	40	5	23	0.100	**P1A-4HMB**

Foot - MS3

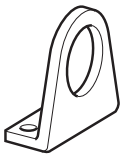

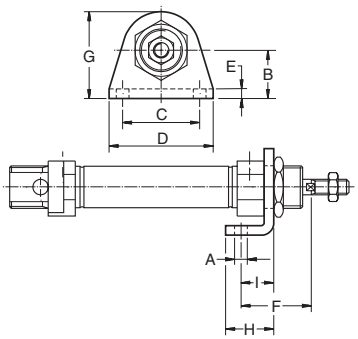

Cylinder Ø mm	A mm	B mm	C mm	D mm	E mm	F mm	G mm	H mm	I mm	Weight lbs	Part number
10	4.5	16	25	35	3	24	26.0	16	11	0.045	**P1A-4CMF**
12-16	5.5	20	32	42	4	32	32.5	20	14	0.08	**P1A-4DMF**
20	6.5	25	40	54	5	36	45.0	25	17	0.18	**P1A-4HMF**
25	6.5	25	40	54	5	40	45.0	25	17	0.18	**P1A-4HMF**

Cover Trunnion

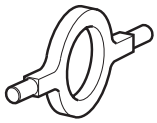

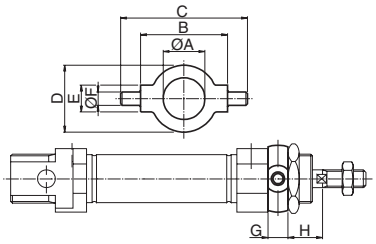

Cylinder Ø mm	A mm	B h14 mm	C mm	D mm	E e9 mm	F mm	G mm	H mm	Weight lbs	Part number
10	12.5	26	38	20	8	4	6	10	0.03	**P1A-4CMJ**
12-16	16.5	38	58	25	10	6	8	14	0.07	**P1A-4DMJ**
20	22.5	46	66	30	10	6	8	16	0.08	**P1A-4HMJ**
25	22.5	46	66	30	10	6	8	20	0.08	**P1A-4HMJ**

Mounting Nut

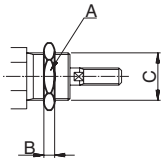

Cylinder Ø mm	A mm	B mm	C mm	Weight lbs	Part number
10	19	6	M12x1.25	0.02	**9127385101**
12-16	24	8	M16x1.50	0.04	**9126725406**
20-25	32	11	M22x1.50	0.09	**9126725407**

☐ Most popular.

Clevis Bracket

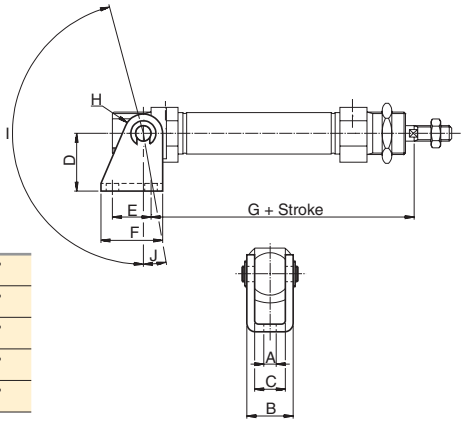

Cylinder Ø mm	A mm	B mm	C mm	D mm	E mm	F mm	G mm	H mm	I °	J °	Weight lbs	Part number
10	4.5	13	8	24	12.5	20	65.3	5	160	17	0.045	**P1A-4CMT**
12	5.5	18	12	27	15.0	25	73.0	7	170	15	0.08	**P1A-4DMT**
16	5.5	18	12	27	15.0	25	80.0	7	170	15	0.08	**P1A-4DMT**
20	6.5	24	16	30	20.0	32	91.0	10	165	10	0.18	**P1A-4HMT**
25	6.5	24	16	30	20.0	32	100.0	10	165	10	0.18	**P1A-4HMT**

Rod clevis

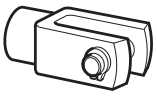

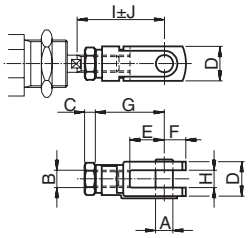

Cylinder Ø mm	A mm	B	C mm	D mm	E mm	F mm	G mm	H mm	I mm	J mm	Weight lbs	Part number
10	4	M4	2.2	8	8	5	16	4	22.0	2.0	0.015	**P1A-4CRC**
12-16	6	M6	3.2	12	12	7	24	6	31.0	3.0	0.05	**P1A-4DRC**
20	8	M8	4.0	16	16	10	32	8	40.5	3.5	0.10	**P1A-4HRC**
25	10	M10 x 1.25	5.0	20	20	12	40	10	49.0	3.0	0.21	**P1A-4JRC**

Swivel Rod Eye

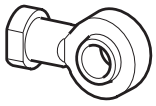

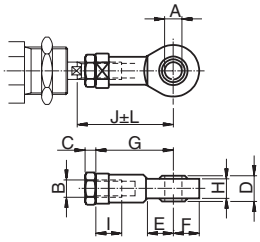

Cylinder Ø mm	A mm	B	C mm	D mm	E mm	F mm	G mm	H mm	I mm	J mm	K mm	L mm	Weight lbs	Part number
10	5	M4	2.2	8	10	9	27	6.0	8	33.0	9	2.0	0.04	**P1A-4CRS**
12-16	6	M6	3.2	9	10	10	30	6.8	9	38.5	11	1.5	0.06	**P1A-4DRS**
20	8	M8	4.0	12	12	12	36	9.0	12	46.0	14	2.0	0.10	**P1A-4HRS**
25	10	M10 x 1.25	5.0	14	14	14	43	10.5	15	52.5	17	2.5	0.19	**P1A-4JRS**

Rod Nut

Stainless Steel, DIN x 5 CrNi 18 10

Cylinder Ø mm	D mm	F mm	E mm	Weight lbs	Part number
10	M4	7	2.2	0.002	**9127385121**
12-16	M6	10	3.2	0.004	**9127385122**
20	M8	13	4.0	0.010	**9127385123**
25	M10x1.25	17	5.0	0.015	**9126725404**

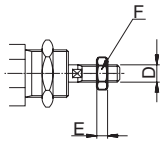

☐ Most popular.

P Series

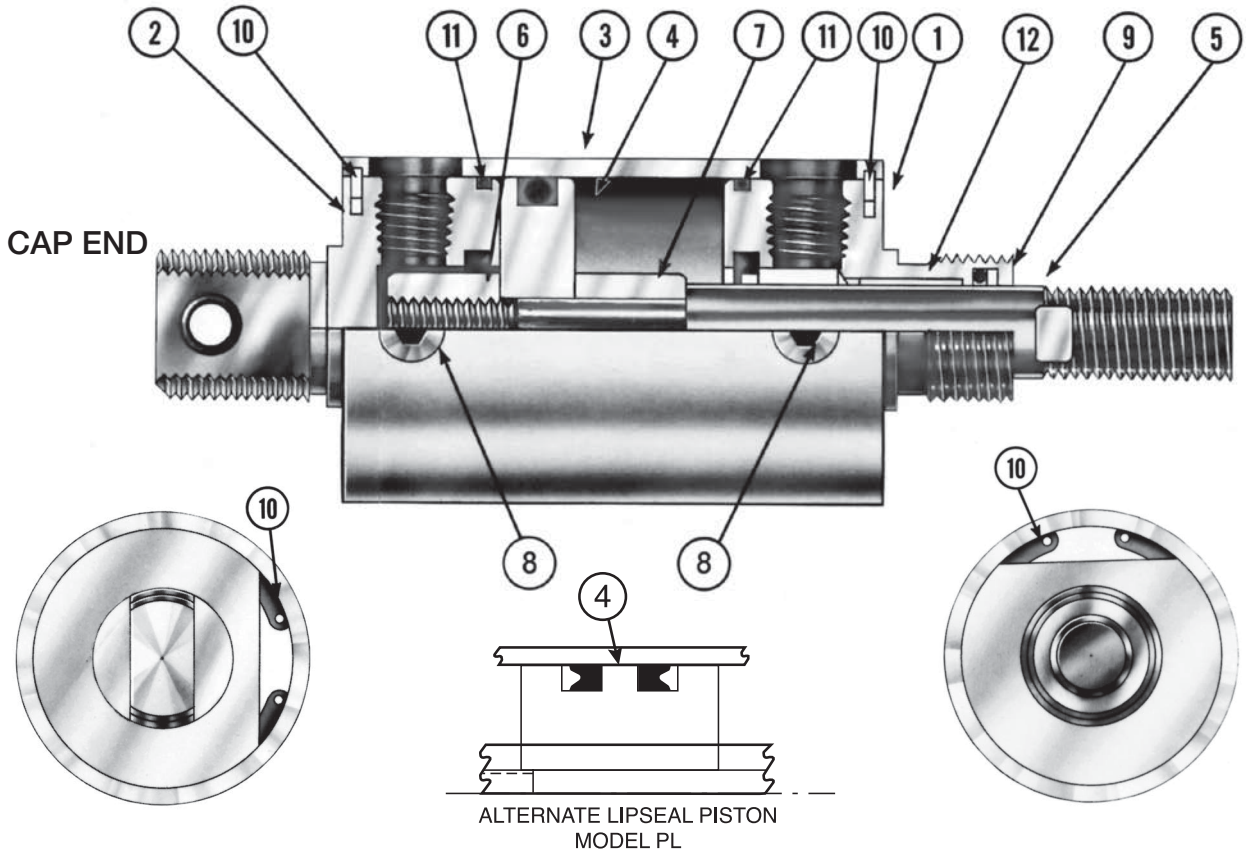

Features

①② **Heads and Caps** are lightweight aluminum for maximum corrosion resistance. The cap is provided with a steel pivot bushing.

③ **Cylinder Body** is hard anodized aluminum for corrosion and abrasion resistance. The smooth I.D. finish provides long seal life.

④ **The Piston** is available with either O-Ring or Lipseal® design.

⑤ **Piston Rod** is chrome plated steel.* The piston is secured to the rod with anaerobic adhesive. Full diameter threads are provided for maximum strength. Wrench flats are standard.

⑥⑦ **Adjustable Cushions** are available on 2" thru 4" bore sizes, while fixed cushions are available on 1-1/8" and 1-1/2" bore sizes.

⑧ **The Cushion Adjustment Needle** is recessed and retained for precise, safe adjustment on all adjustable cushions.

⑨ The wear-compensating **Rod Seal** design conforms to pressure variations and provides maximum seal life.

⑩ **High Strength Steel Retaining Snap Ring** (210,000 PSI ultimate) is precision made to securely lock the head and cap in place. Easily removed for quick disassembly.

⑪ **O-Ring Static Tube Seal** is standard for positive no-leak sealing.

⑫ **Rod Bearing** is low friction bronze for high performance and longer wear.

* 1-1/8" bore has standard 416 stainless steel piston rod material.

Features

- Repairable design, aluminum construction
- 6 bore sizes: 1-1/8" to 4"
- Double-acting, spring-return and spring-extend models
- Cushions optional at either or both ends
- Universal nose and tang mounts
- Standard stroke lengths to 20 inches in one inch increments, plus 1-1/2", 2-1/2" and 3-1/2" strokes. Fraction strokes and strokes over 20 inches are available upon request.

Operating information

Operating pressure:	150 PSIG (8 bar)
Temperature range:	
Standard seals	-10°F to 165°F (-23°C to 74°C)
Fluorocarbon seals	-10°F to 250°F (-23°C to 121°C)
Filtration requirements:	40 micron, dry filtered air

Ordering information

2-1/2" C K [ ] P L U [ ] [ ] [ ] 1 6 [ ] C X6"

Bore size

1-1/8"
1-1/2"
2"
2-1/2"
3"
4"

Cushion head end

Blank	No cushion
C	Cushion head end

Double rod

Blank	Single rod
K	Double rod

Mounting style

Blank	Standard
N	No tang
A	Dual tang

Series

Piston

Blank	O-ring piston
L	Lipseal piston

Sensors available on lipseal pistons only.

Ports

U	N.P.T.F.

Seals / options

Blank	Buna-N
V	Fluorocarbon
M	Magnet with Buna-N seals [1]

Spring

E	Spring extend
R	Spring return

Special number

Use "S" symbol only if special feature is required (specify).

NOTE: Do not use symbol "S" for rod end modification.

Rod diameter style

1	Standard

For double rod cylinders specify rod code twice.

Rod thread

6	Standard
3	Special

(For special rod end specify "CC" thread Dia. A and LE or LE1 or Dim. or submit sketch.)

Rod material

Blank	Standard rod
D	416 Stainless steel [2]

Cushion cap end

Blank	No cushion
C	Cushion cap end

Stroke

Specify in inches. Show times symbol "X" just ahead of stroke length.

Safety Cushion Adjustment Location

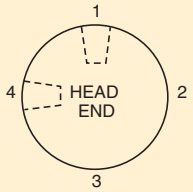

With port in position 1, cushion location will be position 4.

Notes:
[1] Must specify lipseal piston with magnet option.
[2] Standard on 1-1/8" bore. {D} not required.

Sensors
See section L for sensors.

For ordering purposes, when special options or common modifications are requested, the factory will assign a sequential part number in place of the model number.

Specifications

- Nominal pressure – up to 150 PSI air
- Repairable design
- Bore sizes: 1-1/8", 1-1/2", 2", 2-1/2", 3" and 4"
- Double-acting, Spring-return and Spring-extend models
- Cushions optional at either or both ends
- Universal nose and tang mounts
- Factory pre-lubricated
- Standard temperature range: -10°F to 165°F. fluorocarbon seals for operation up to 250°F are available at extra cost.
- Standard stroke lengths to 20 inches in one inch increments, plus 1-1/2", 2-1/2" and 3-1/2" strokes. Fraction strokes and strokes over 20 inches are available upon request.

⚠ DANGER

The piston to rod threaded connection is secured with an anaerobic adhesive which is temperature sensitive. Operating cylinders in excess of the following recommendations can cause the piston and piston rod assembly to unthread. Cylinders ordered with standard seals (Buna-N) are assembled with an anaerobic adhesive with a maximum operating temperature rating of 165°F. Cylinders ordered with Fluorocarbon seals are assembled with an anaerobic adhesive with a maximum operating temperature rating of 250°F.

Cylinders originally manufactured with standard seals (Buna-N) that will be exposed to an ambient temperature above 165°F must be modified for higher temperature service. Contact your local factory immediately and arrange for the piston to piston rod connection to be properly modified for the higher temperature service.

Mounting Styles Available

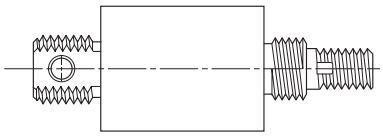

Model P – O-Ring Piston – Single Rod
1-1/8" Bore thru 3" Bore

Model PL – Lipseal Piston – Single Rod
1-1/8" Bore thru 4" Bore

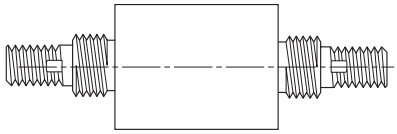

Model KP – O-Ring Piston – Double Rod
1-1/8" Bore thru 3" Bore

Model KPL – Lipseal Piston – Double Rod
1-1/8" Bore thru 4" Bore

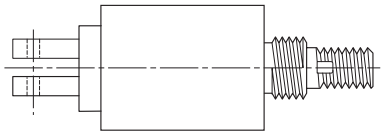

Model AP – O-Ring Piston – Single Rod
1-1/8" Bore thru 3" Bore

Model APL – Lipseal Piston – Single Rod
1-1/8" Bore thru 4" Bore

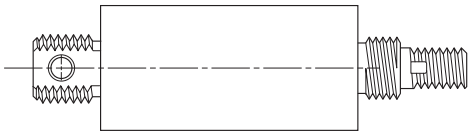

Model PR – O-Ring Piston – Spring Return

Model PE – O-Ring Piston – Spring Extend
1-1/8" Bore thru 3" Bore

Model PLR – Lipseal Piston – Spring Return
Model PLE – Lipseal Piston – Spring Extend
1-1/8" Bore thru 4" Bore

Force Data

(to determine force multiply operating pressure by area figures below)

Bore size	Rod dia.	Major area (sq. in.)	Minor area (sq. in.)
1-1/8"	3/8"	0.992	0.882
1-1/2"	1/2"	1.766	1.570
2"	5/8"	3.141	2.835
2-1/2"	3/4"	4.906	4.464
3"	3/4"	7.065	6.623
4"	1"	12.560	11.775

Cylinder Cushion Lengths

Bore	Head	Cap
1-1/8"	0.560"	0.560"
1-1/2" & 2"	0.750"	0.750"
2-1/2" & 3"	0.875"	0.875"
4"	1.250"	1.250"

Model P

O-ring piston – single rod

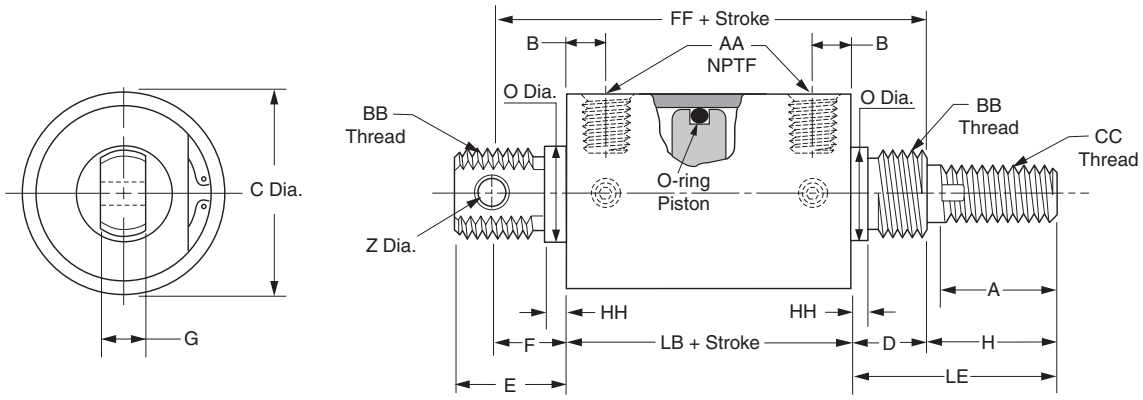

Model P cylinders are available without tang covered by dimension E minus HH at no extra charge. To order specify Model NP.

Model KP

O-ring piston – double rod

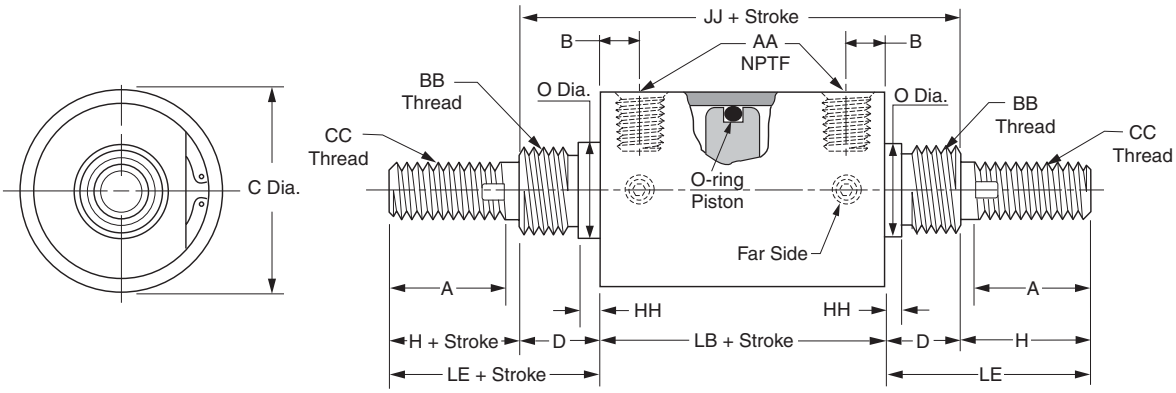

Mounting nuts not supplied with cylinder.

Model P and KP single and double rod cylinders

Bore Size	Rod Dia.	LB	B	C	D	E	F	G	H	A	O	Z	AA	BB	CC	FF	HH	JJ	LE
1-1/8	3/8	2-1/16	13/32	1-3/8	5/8	1	11/16	3/8	1	7/8	3/4	1/4	1/8	3/4-16	3/8-16	3-3/8	3/32	3-5/16	1-5/8
1-1/2	1/2	2-5/8	1/2	1-3/4	7/8	1-1/4	7/8	1/2	1-7/16	1-1/4	1-1/16	5/16	1/4	1-14	1/2-13	4-3/8	1/8	4-3/8	2-5/16
2	5/8	2-5/8	1/2	2-1/4	7/8	1-1/4	7/8	1/2	1-7/16	1-1/4	1-1/16	5/16	1/4	1-14	5/8-11	4-3/8	1/8	4-3/8	2-5/16
2-1/2	3/4	3	5/8	2-3/4	1	2	1-3/8	5/8	1-11/16	1-1/2	1-3/8	7/16	3/8	1-3/8-12	3/4-10	5-3/8	3/16	5	2-11/16
3	3/4	3	5/8	3-1/4	1	2	1-3/8	5/8	1-11/16	1-1/2	1-3/8	7/16	3/8	1-3/8-12	3/4-10	5-3/8	3/16	5	2-11/16

Note: 4" bore size offered only with Lipseal Piston.
FLUOROCARBON SEALS for operation to 250°F are available at extra cost. Specify model PV or KPV.

Model PL

Lipseal piston – single rod

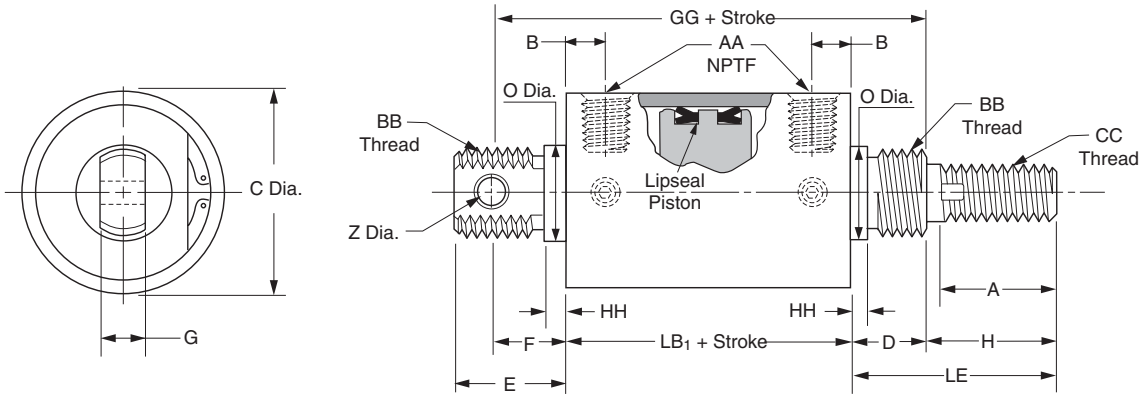

Model PL cylinders are available without tang covered by dimension E minus HH at no extra charge. To order specify Model NPL.

Model KPL

Lipseal piston – double rod

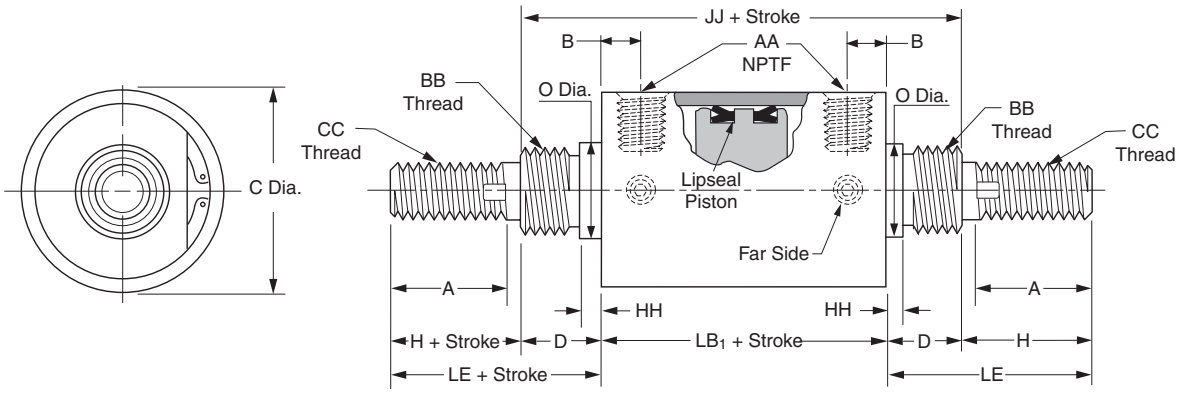

Mounting nuts not supplied with cylinder.

Model PL and KPL single and double rod cylinders

Bore Size	Rod Dia.	LB_1	B	C	D	E	F	G	H	A	O	Z	AA	BB	CC	GG	HH	KK	LE
1-1/8	3/8	3-1/16	13/32	1-3/8	5/8	1	11/16	3/8	1	7/8	3/4	1/4	1/8	3/4-16	3/8-16	4-3/8	3/32	4-5/16	1-5/8
1-1/2	1/2	3-5/8	1/2	1-3/4	7/8	1-1/4	7/8	1/2	1-7/16	1-1/4	1-1/16	5/16	1/4	1-14	1/2-13	5-3/8	1/8	5-3/8	2-5/16
2	5/8	3-5/8	1/2	2-1/4	7/8	1-1/4	7/8	1/2	1-7/16	1-1/4	1-1/16	5/16	1/4	1-14	5/8-11	5-3/8	1/8	4-3/8	2-5/16
2-1/2	3/4	4	5/8	2-3/4	1	2	1-3/8	5/8	1-11/16	1-1/2	1-3/8	7/16	3/8	1-3/8-12	3/4-10	6-3/8	3/16	6	2-11/16
3	3/4	4	5/8	3-1/4	1	2	1-3/8	5/8	1-11/16	1-1/2	1-3/8	7/16	3/8	1-3/8-12	3/4-10	6-3/8	3/16	6	2-11/16
4	1	5-1/2	15/16	4-3/8	1-1/8	2-3/16	1-7/16	3/4	2-1/4	1-7/8	1-3/4	1/2	1/2	1-3/4-12	1-14	8-1/16	3/16	7-1/4	3-3/8

FLUOROCARBON SEALS for operation to 250°F are available at extra cost. Specify model PLV or KPLV.

Model AP

O-ring piston – single rod
1-1/8" bore thru 3" bore

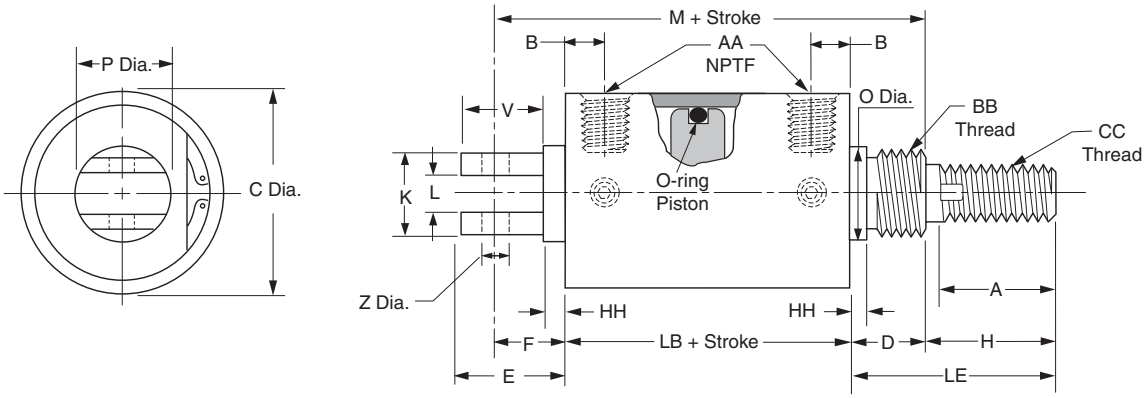

Model APL

Lipseal piston – single rod
1-1/8" bore thru 4" bore

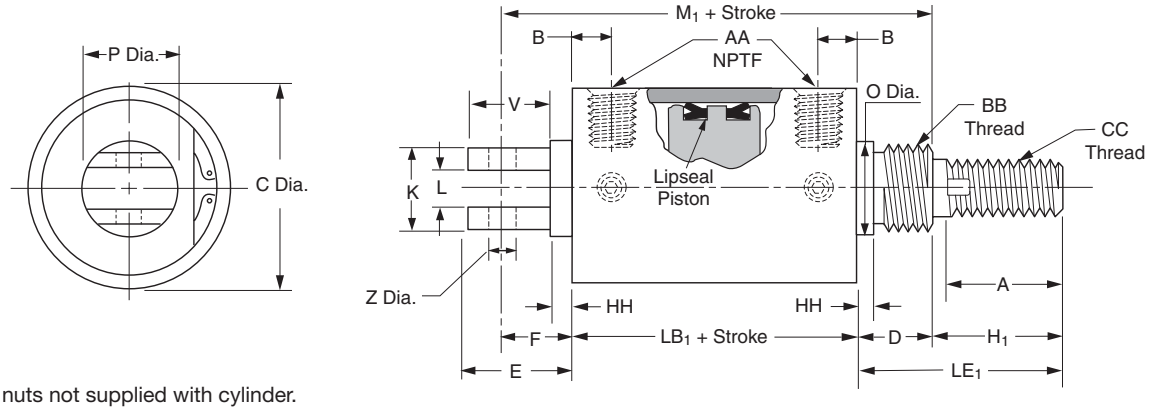

Mounting nuts not supplied with cylinder.

Models AP and APL only

Bore Size	Rod Dia.	LB	LB_1	B	C	D	E	F	H	H_1	A	K	L	M	M_1	O	P	V	Z	AA	BB	CC	HH	LE	LE_1
1-1/8	3/8	2-1/16	3-1/16	13/32	1-3/8	5/8	1	11/16	1	1	7/8	15/16	3/8	4-3/8	5-3/8	3/4	15/16	7/8	3/8	1/8	3/4-16	3/8-16	3/32	1-5/8	1-5/8
1-1/2	1/2	2-5/8	3-5/8	1/2	1-3/4	7/8	1-5/8	15/16	2-7/16	1-7/16	1-1/4	1-1/4	1/2	6-7/8	6-7/8	1-1/16	1-1/4	1-1/2	3/8	1/4	1-14	1/2-13	1/8	3-5/16	2-5/16
2	5/8	2-5/8	3-5/8	1/2	2-1/4	7/8	2-1/4	1-9/16	2-7/16	1-7/16	1-1/4	1-1/2	1/2	7-1/2	7-1/2	1-1/16	1-11/16	1-3/4	1/2	1/4	1-14	5/8-11	1/8	3-5/16	2-5/16
2-1/2	3/4	3	4	5/8	2-3/4	1	1-13/16	1-1/8	3-11/16	2-11/16	1-1/2	1-1/2	1/2	8-13/16	8-13/16	1-3/8	2-1/4	1-11/16	1/2	3/8	1-3/8-12	3/4-10	3/16	4-11/16	3-11/16
3	3/4	3	4	5/8	3-1/4	1	2-5/16	1-5/8	3-11/16	2-11/16	1-1/2	1-1/2	1/2	9-5/16	9-5/16	1-3/8	2-1/4	1-3/4	1/2	3/8	1-3/8-12	3/4-10	3/16	4-11/16	3-11/16
4	1	–	5-1/2	15/16	4-3/8	1-1/8	2-7/8	1-7/8	–	2-1/4	1-7/8	2-1/4	3/4	–	10-3/4	1-3/4	3	2-1/2	3/4	1/2	1-3/4-12	1-14	3/16	–	3-3/8

FLUOROCARBON Seals for operation to 250°F are available at extra cost. Specify model ASPV or ASPLV.

Model PR – Spring return
Model PE – Spring extend

O-ring piston

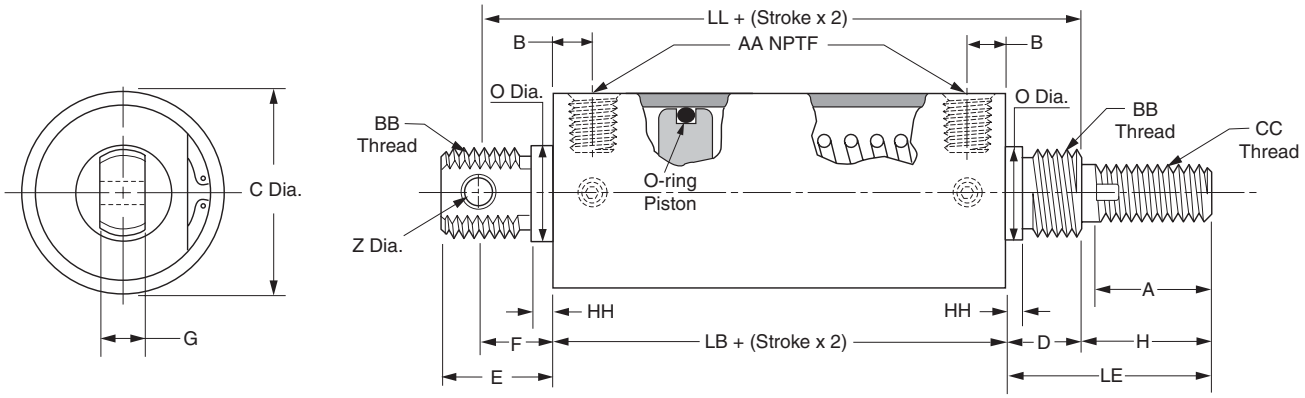

Spring return cylinders are available without tail section covered by dimension E minus HH at no extra charge. To order, add letter "N" to model number.

Model PLR – Spring return
Model PLE – Spring extend

Lipseal piston

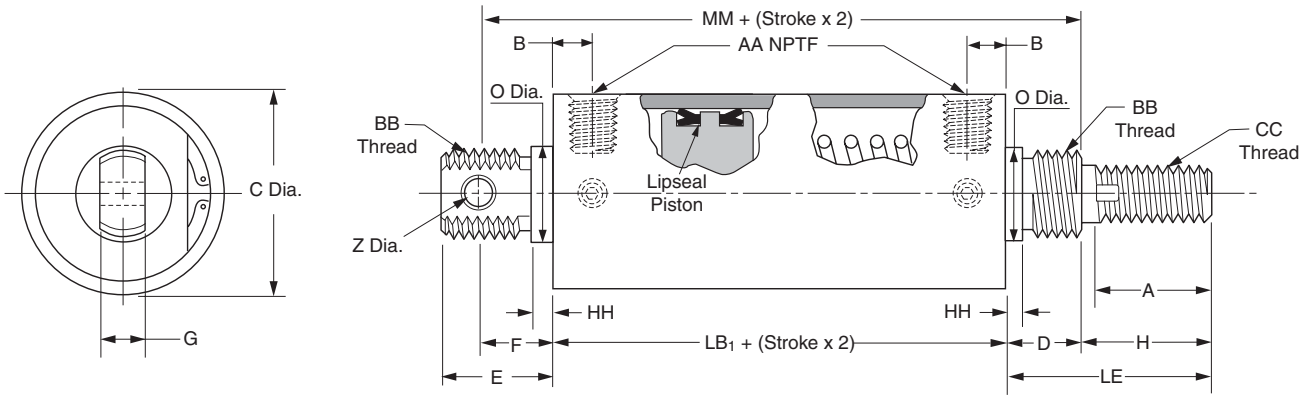

Mounting nuts not supplied with cylinder.

For single rod spring return cylinders up to 6" stroke (no load spring)

Bore Size	Rod Dia.	LB	LB_1	B	C	D	E	F	G	H	A	O	Z	AA	BB	CC	HH	LL	MM	LE	Spring force Pre-load (lbs.)	Spring force Max. load (lbs.)
1-1/8	3/8	2-1/16	3-1/16	13/32	1-3/8	5/8	1	11/16	3/8	1	7/8	3/4	1/4	1/8	3/4-16	3/8-16	3/32	3-3/8	4-3/8	1-5/8	12	36
1-1/2	1/2	2-5/8	3-5/8	1/2	1-3/4	7/8	1-1/4	7/8	1/2	1-7/16	1-1/4	1-1/16	5/16	1/4	1-14	1/2-13	1/8	4-3/8	5-3/8	2-5/16	14	45
2	5/8	2-5/8	3-5/8	1/2	2-1/4	7-/8	1-1/4	7/8	1/2	1-7/16	1-1/4	1-1/16	5/16	1/4	1-14	5/8-11	1/8	4-3/8	5-3/8	2-5/16	18	48
2-1/2	3/4	3	4	5/8	2-3/4	1	2	1-3/8	5/8	1-11/16	1-1/2	1-3/8	7/16	3/8	1-3/8-12	3/4-10	3/16	5-3/8	6-3/8	2-11/16	30	64
3	3/4	3	4	5/8	31/4	1	2	1-3/8	5/8	1-11/16	1-1/2	1-3/8	7/16	3/8	1-3/8-12	3/4-10	3/16	5-3/8	6-3/8	2-11/16	30	64
4	1	▲	5-1/2	15/16	4-3/8	1-1/8	2-3/16	1-7/16	3/4	2-1/4	1-7/8	1-3/4	1/2	1/2	1-3/4-12	1-14	3/16	▲	8-1/16	3-3/8	50	148

▲ 4" bore spring return cylinders, available only with lipseal type piston.
** Net stroke plus stop tube = gross stroke.
FLUOROCARBON SEALS for operation to 250°F are available at extra cost. Specify model PVR, PVE, PLVR or PLVE.
* Dimensions shown are for cylinder with no load spring. For heavier springs or double rod spring return cylinders, consult factory.

Foot and Flange Mounts

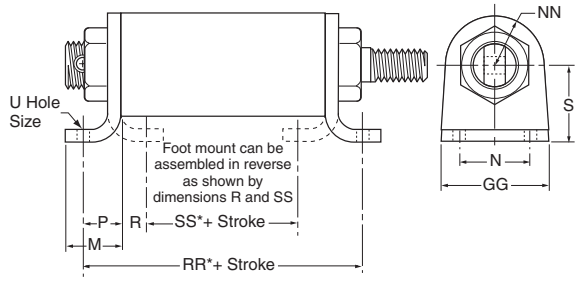

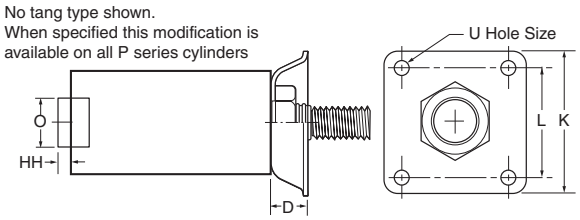

Bore size	D	K	L	M	N	O	P	R	S	U	GG	HH	NN	RR	SS	Foot mount*	Flange mount**
1-1/8	5/8	2-1/2	2	1-3/8	1-11/16	3/4	7/8	5/8	1-9/32	9/32	2-11/16	3/32	11/16	3-13/16	13/16	**L069190000**	**L069230000**
1-1/2	7/8	3-1/4	2-1/2	1-9/32	1-5/8	1-1/16	7/8	9/16	1-3/4	9/32	2-7/16	1/8	1-1/8	4-3/8	1-1/2	**L069200000**	**L069240000**
2	7/8	3-1/4	2-1/2	1-9/32	1-5/8	1-1/16	7/8	9/16	1-3/4	9/32	2-7/16	1/8	1-1/8	4-3/8	1-1/2	**L069200000**	**L069240000**
2-1/2	1	4-1/2	3-3/8	1-29/32	2-1/4	1-3/8	1-1/4	7/8	2-3/8	13/32	3-9/16	3/16	1-5/8	5-1/2	1-1/4	**L069210000**	**L069250000**
3	1	4-1/2	3-3/8	1-29/32	2-1/4	1-3/8	1-1/4	7/8	2-3/8	13/32	3-9/16	3/16	1-5/8	5-1/2	1-1/4	**L069210000**	**L069250000**
4	1-1/8	5-1/4	4	2-17/32	3-1/4	1-3/4	1-3/4	1-5/16	3-3/16	15/32	4-13/16	3/16	2-3/16	9 ▲	2-7/8 ▲	**L069220000**	**L069260000**

▲ Dimension shown is for lipseal piston type.
* Part number includes one foot mounting and one mounting nut.
** Includes mounting nut.

Clevis Bracket

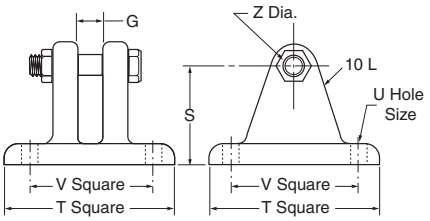

Bore size	G	S	T	U	V	Z	Part number
1-1/8	3/8	1-9/32	2-1/4	9/32	1-3/4	1/4	**L067300000**
1-1/2	1/2	1-3/4	3	9/32	2-1/4	5/16	**L067310000**
2	1/2	1-3/4	3	9/32	2-1/4	5/16	**L067310000**
2-1/2	5/8	2-3/8	4	13/32	3	7/16	**L067320000**
3	5/8	2-3/8	4	13/32	3	7/16	**L067320000**
4	3/4	3-3/16	5	15/32	3-3/4	1/2	**L067330000**

Connecting pin and locknut furnished with clevis bracket.

Rod Clevis

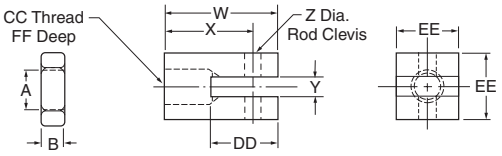

Cyl. bore	Rod dia.	A	B	CC	DD	EE	FF	W	X	Y	Z	Part number
1-1/8	3/8	3/8-16	7/32	3/8-16	1-1/8	3/4	5/8	1-3/4	1-3/8	5/16	1/4	**L067340000**
1-1/2	1/2	1/2-13	5/16	1/2-13	1-5/16	1	15/16	2-1/4	1-3/4	3/8	5/16	**L067350000**
2	5/8	5/8-11	3/8	5/8-11	1-5/16	1	15/16	2-1/4	1-3/4	3/8	5/16	**L067360000**
2-1/2	3/4	3/4-10	27/64	3/4-10	1-5/16	1-1/4	1-1/16	2-3/8	1-13/16	1/2	7/16	**L067370000**
3	3/4	3/4-10	27/64	3/4-10	1-5/16	1-1/4	1-1/16	2-3/8	1-13/16	1/2	7/16	**L067370000**
4	1	1-14	35/64	1-14	1-13/16	1-1/2	1-9/16	3-3/8	2-5/8	5/8	1/2	**L067380000**

Note: Rod end jam nut furnished with rod clevis.

☐ Most popular.

Mounting Nut for Cylinders**

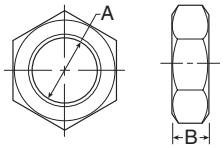

Bore size	A	B	Part number
1-1/8	3/4-16	27/64	**0833010048**
1-1/2 & 2	1-14	35/64	**0833010100**
2-1/2 & 3	1-3/8-12	25/32	**0833010124**
4	1-3/4-12	15/16	**0831830000**

Sensors
See section L for sensors.

Sensors

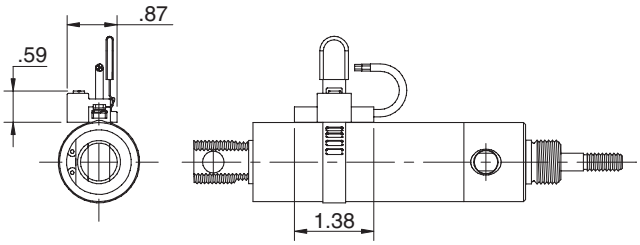

Example:

To order a 1-1/2" x 6" cylinder with P Series sensors to sense the end of stroke at both head and cap end.

Item	Qty.	Description
A	(2)	P8S-GPSHX Sensor
B	(2)	P8S-TMC02 Clamp Assembly

How To Order P Series Sensors

P Series sensors are not mounted to the cylinder prior to shipment. When ordering a cylinder to accommodate a P Series sensor:

1. Derive a proper cylinder number as shown on the Ordering Information page and include magnet, option "M" in Seals/Option Code.
2. As a separate item specify the number of sensors required.*
3. As a third item specify the quantity of the proper clamp assembly.*

* For information regarding sensors, please refer to the Electronic Sensors section.

Bore	Piston Travel at Mid Stroke* (Sensor Activated)
1-1/8"	0.33
1-1/2"	0.37
2"	0.49
2-1/2"	0.44
3"	0.40
4"	0.33

* Sensing distance at "End of Stroke" can be adjusted from 'mid-stroke' sensing distance to zero. For sensor specifications and part numbers, see Electronic Sensors section.

† Piston travel ±.01".

Service Kits

Table A

Seal kit for series "P" cylinders with o-ring piston
Contains: 2 each symbol #15 & 1 each symbol #16, 24 & 25

Bore size	Standard seal kit part number	Hi-temp seal kit part number
1-1/8"	L067680000	L067730000
1-1/2"	L067690000	L067740000
2"	L067700000	L067750000
2-1/2"	L067710000	L067760000
3"	L067720000	L067770000

Table B

Seal kit for series "P" cylinders with lipseal piston
Contains: 2 each symbol #15 & 23 & 1 each symbol #24 & 25

Bore size	Standard seal kit part number	Hi-temp seal kit part number
1-1/8"	L067780000	L067840000
1-1/2"	L067790000	L067850000
2"	L067800000	L067860000
2-1/2"	L067810000	L067870000
3"	L067820000	L067880000
4"	L067830000	L067890000

Table C

Cushion seal kit for series "P" cylinders
Contains: 2 each symbol #19 & 21 (Symbol #21 not required or supplied for 1-1/8" & 1-1/2" bore size cylinders)

Bore size	Standard seal kit part number	Hi-temp seal kit part number
1-1/8"	L067900000	L067950000
1-1/2"	L067910000	L067960000
2"	L067920000	L067970000
2-1/2"	L067930000	L067980000
3"	L067930000	L067980000
4"	L067940000	L067990000